Case Style UH

Outline Dimensions

UH3130

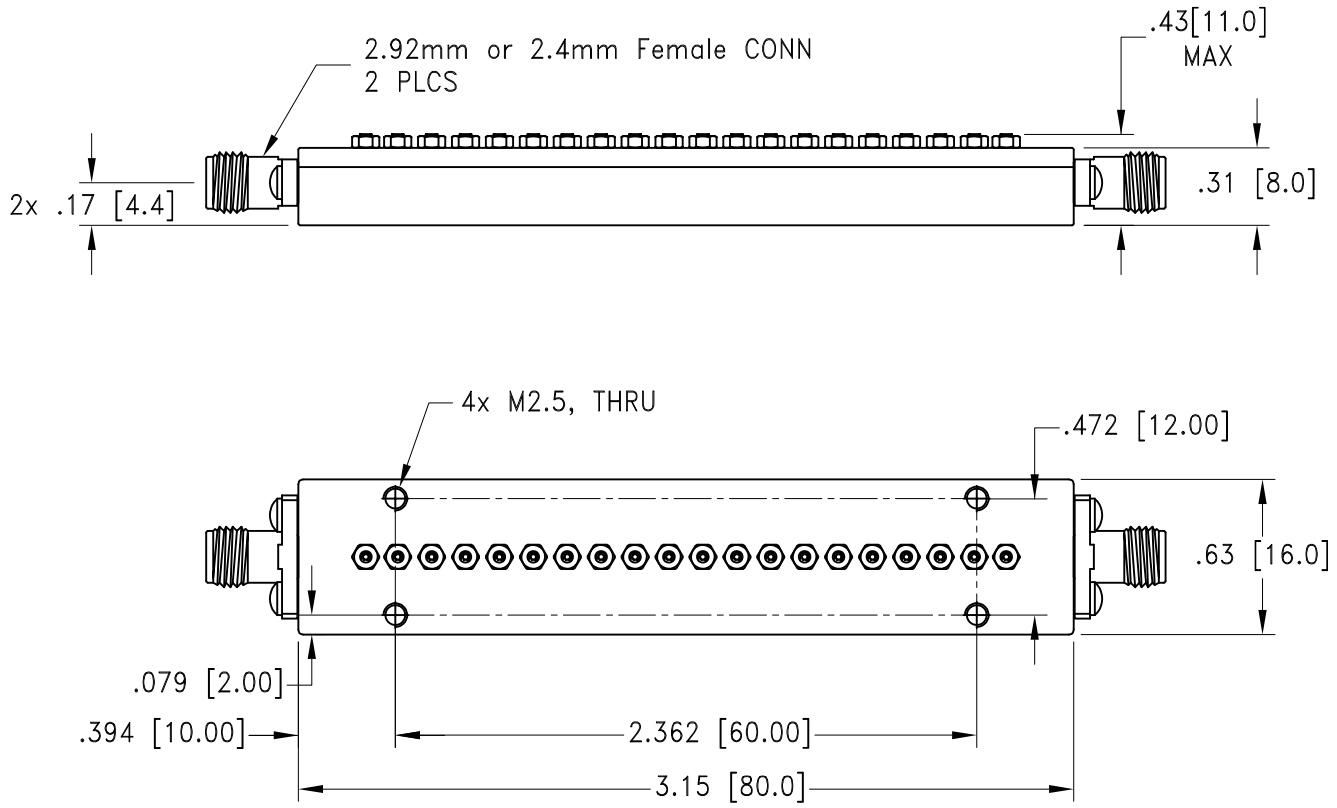

Weight: 77.5 grams ± 5 grams;
Dimensions are in inches (mm). Tolerances: 2 Pl.±.03; 3 Pl. ± .015

Notes:
1. Case material: H62 Copper Alloy
2. Case Finish: Black Painting

Mini-Circuits®
ISO 9001 ISO 14001 CERTIFIED
ALL NEW minicircuits.com
P.O. Box 350166, Brooklyn, New York 11235-0003 (718) 934-4500 Fax (718) 332-4661 For detailed performance specs & shopping online see Mini-Circuits web site
The Design Engineers Search Engine Provides ACTUAL Data Instantly From MINI-CIRCUITS At: www.minicircuits.com
RF/IF MICROWAVE COMPONENTS