Surface Mount

Power Splitter/Combiner

LRPQ-70

2 Way-90° 50Ω 65 to 75 MHz

CASE STYLE: QQQ130

Maximum Ratings

Operating Temperature	-40°C to 85°C
Storage Temperature	-55°C to 100°C
Power Input (as a splitter)	1W max.

Permanent damage may occur if any of these limits are exceeded.

Pin Connections

SUM PORT	6
PORT 1 (0°)	4
PORT 2 (+90°)	1
GROUND	2,5
50 OHM TERM EXTERNAL	3

Outline Drawing

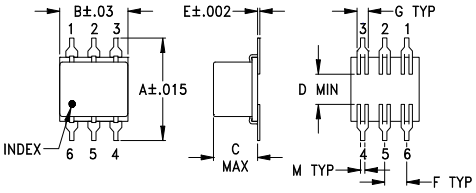

PCB Land Pattern

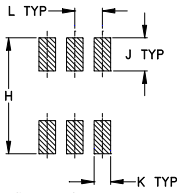

Suggested Layout,
Tolerance to be within ±.002

Outline Dimensions (inch / mm)

A	B	C	D	E	F	G
.400	.31	.200	.10	.010	.100	.050
10.16	7.87	5.08	2.54	0.25	2.54	1.27

H	J	K	L	M		wt
.420	.120	.060	.100	.020		grams
10.67	3.05	1.52	2.54	0.51		0.55

Demo Board MCL P/N: TB-226
Suggested PCB Layout (PL-140)

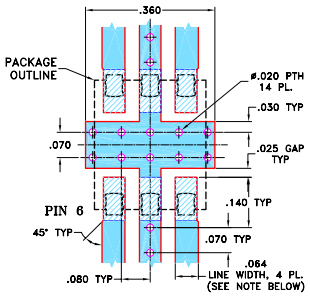

NOTE:
1. TRACE WIDTH IS SHOWN FOR ROGERS RO4350B WITH DIELECTRIC THICKNESS .030" ± .002"; COPPER: 1/2 OZ. EACH SIDE. FOR OTHER MATERIALS TRACE WIDTH MAY NEED TO BE MODIFIED.
2. BOTTOM SIDE OF THE PCB IS CONTINUOUS GROUND PLANE.

DENOTES PCB COPPER LAYOUT WITH SMOBC (SOLDER MASK OVER BARE COPPER)

DENOTES COPPER LAND PATTERN FREE OF SOLDER MASK

Features

- low insertion loss, 0.1 dB typ.
- high isolation, 30 dB typ.
- excellent phase unbalance 1 deg. typ.
- excellent return loss, VSWR 1.12:1 typ.

Applications

- VHF
- instrumentation
- modulators
- balanced amplifiers

Electrical Specifications

FREQ. RANGE (MHz)	ISOLATION (dB)		INSERTION LOSS (dB) Avg. of Coupled Outputs ABOVE 3 dB		PHASE UNBALANCE (Degrees)	AMPLITUDE UNBALANCE (dB)
f_L-f_U	Typ.	Min.	Typ.	Max.	Max.	Max.
65-75	30	20	0.1	0.5	3	1.0

LRPQ units have bottom barrier ground plane insulated with glass barrier.

Typical Performance Data

Frequency (MHz)	Total Loss[1] (dB) S-1	Total Loss[1] (dB) S-2	Amplitude Unbalance (dB)	Isolation (dB)	Phase Unbalance (deg.)	VSWR S	VSWR 1	VSWR 2
65.00	2.78	3.45	0.68	29.08	90.74	1.12	1.11	1.06
65.50	2.81	3.42	0.61	29.00	90.74	1.12	1.11	1.06
66.00	2.84	3.38	0.54	28.95	90.73	1.12	1.11	1.06
66.75	2.88	3.34	0.45	28.81	90.69	1.12	1.11	1.06
67.50	2.94	3.29	0.35	28.73	90.72	1.12	1.11	1.06
68.25	2.98	3.25	0.27	28.60	90.75	1.12	1.11	1.06
69.00	3.02	3.20	0.18	28.52	90.78	1.12	1.11	1.06
69.75	3.07	3.15	0.09	28.40	90.78	1.12	1.11	1.06
70.50	3.10	3.10	0.00	28.32	90.81	1.12	1.11	1.06
71.25	3.15	3.07	0.08	28.21	90.77	1.12	1.11	1.06
72.00	3.19	3.02	0.17	28.13	90.79	1.12	1.11	1.06
73.00	3.25	2.97	0.29	27.99	90.82	1.12	1.11	1.06
74.00	3.30	2.91	0.39	27.87	90.86	1.12	1.11	1.06
74.50	3.33	2.89	0.45	27.83	90.84	1.12	1.11	1.06
75.00	3.36	2.86	0.50	27.76	90.86	1.12	1.11	1.06

1. Total Loss = Insertion Loss + 3dB splitter loss.

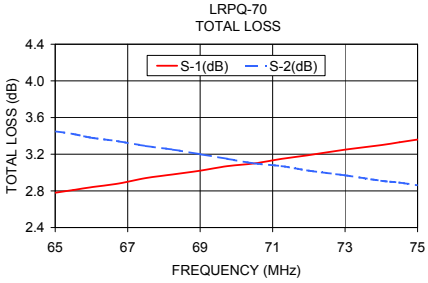

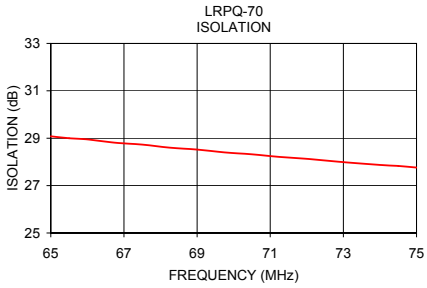

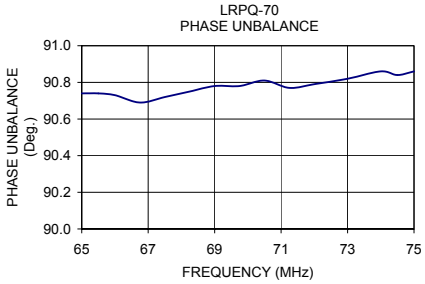

electrical schematic

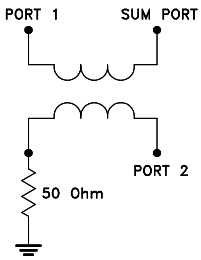

Notes
A. Performance and quality attributes and conditions not expressly stated in this specification document are intended to be excluded and do not form a part of this specification document.
B. Electrical specifications and performance data contained in this specification document are based on Mini-Circuit's applicable established test performance criteria and measurement instructions.
C. The parts covered by this specification document are subject to Mini-Circuits standard limited warranty and terms and conditions (collectively, "Standard Terms"); Purchasers of this part are entitled to the rights and benefits contained therein. For a full statement of the Standard Terms and the exclusive rights and remedies thereunder, please visit Mini-Circuits' website at www.minicircuits.com/MCLStore/terms.jsp

REV. C
M151107
LRPQ-70
HY/TD/CP
150819

Case Style QQQ

QQQ130 (non-waterproof)
QQQ828 (washable)

Outline Dimensions

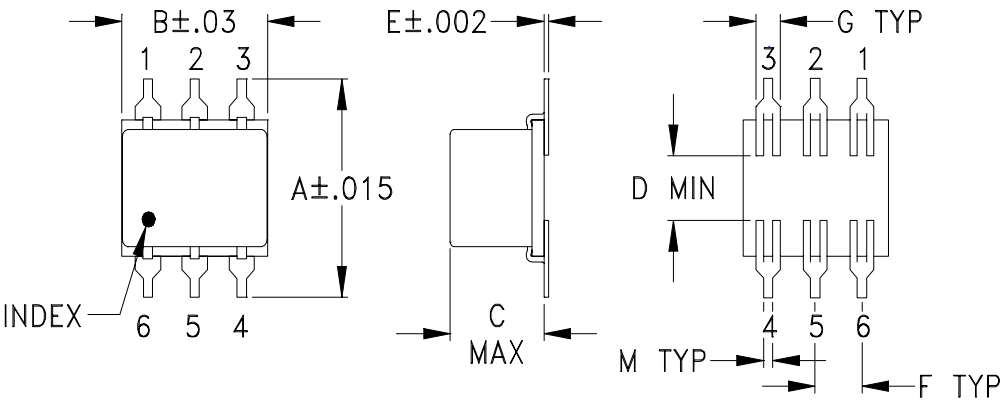

PCB Land Pattern

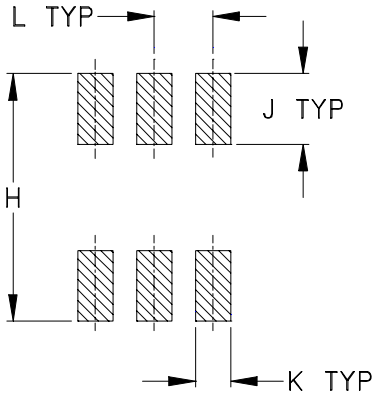

Suggested Layout,
Tolerance to be within ±.002

CASE#	A	B	C	D	E	F	G	H	J	K	L	M	WT, GRAM
QQQ130	.400 (10.16)	.31 (7.87)	.200 (5.08)	.10 (2.54)	.010 (.25)	.100 (2.54)	.050 (1.27)	.420 (10.67)	.120 (3.05)	.060 (1.52)	.100 (2.54)	.020 (.51)	.55
QQQ828			.050 (1.27)										.20

Dimensions are in inches (mm). Tolerances: 2 Pl. ± .01; 3 Pl. ± .005

Notes:

1. Case material: Ceramic.
2. Termination finish:
   For RoHS Case Styles: Tin plate over Nickel plate.
   For RoHS-5 Case Styles: Tin-Lead plate.

Mini-Circuits®
INTERNET http://www.minicircuits.com
P.O. Box 350166, Brooklyn, New York 11235-0003 (718) 934-4500 Fax (718) 332-4661
Distribution Centers NORTH AMERICA 800-654-7949 • 417-335-5935 • Fax 417-335-5945 • EUROPE 44-1252-832600 • Fax 44-1252-837010

Tape & Reel Packaging TR-F10

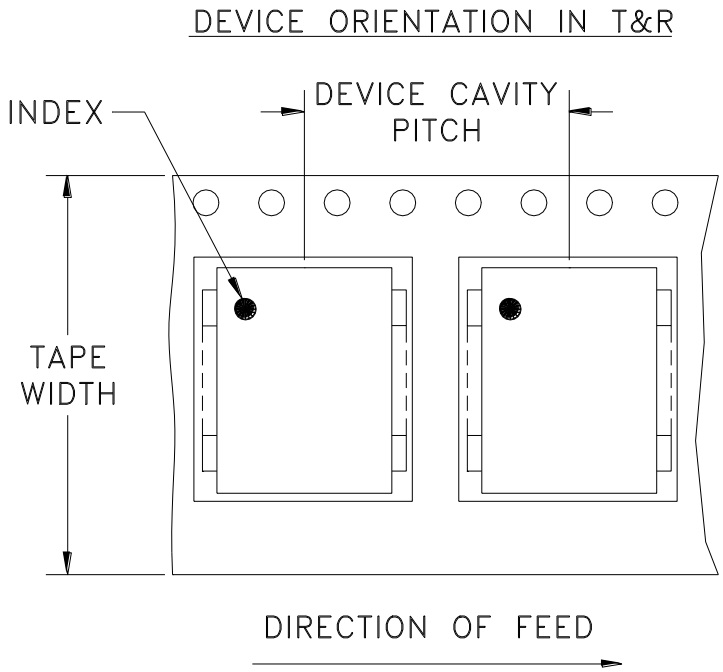

Tape Width, mm	Device Cavity Pitch, mm	Reel Size, inches	Devices per Reel
24	16	7	10,20,50,100,200
		13	500

Mini-Circuits carrier tape materials provide protection from ESD (Electro-Static Discharge) during handling and transportation. Tapes are static dissipative and comply with industry standards EIA-481/EIA-541.

Go to: www.minicircuits.com/pages/pdfs/tape.pdf

Note: Please consult individual model data sheet to determine device per reel availability.

Mini-Circuits®
INTERNET http://www.minicircuits.com
P.O. Box 350166, Brooklyn, New York 11235-0003 (718) 934-4500 Fax (718) 332-4661
Distribution Centers NORTH AMERICA 800-654-7949 • 417-335-5935 • Fax 417-335-5945 • EUROPE 44-1252-832600 • Fax 44-1252-837010
Mini-Circuits ISO 9001 & ISO 14001 Certified

THIRD ANGLE PROJECTION

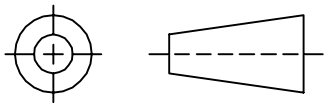

REVISIONS					
REV	ECN No.	DESCRIPTION	DATE	DR	AUTH
OR	M88792	NEW RELEASE	10/20/03	GF	HY
A	M100924	CHANGED ORIENTATION PIN 1 TO PIN 6	09/23/05	GT	HY
B	M102713	ADDED "...WITH SMOBC"	01/12/06	GF	IL

SUGGESTED MOUNTING CONFIGURATION FOR QQQ569 CASE STYLE, "ay/lr" PIN CONNECTION.

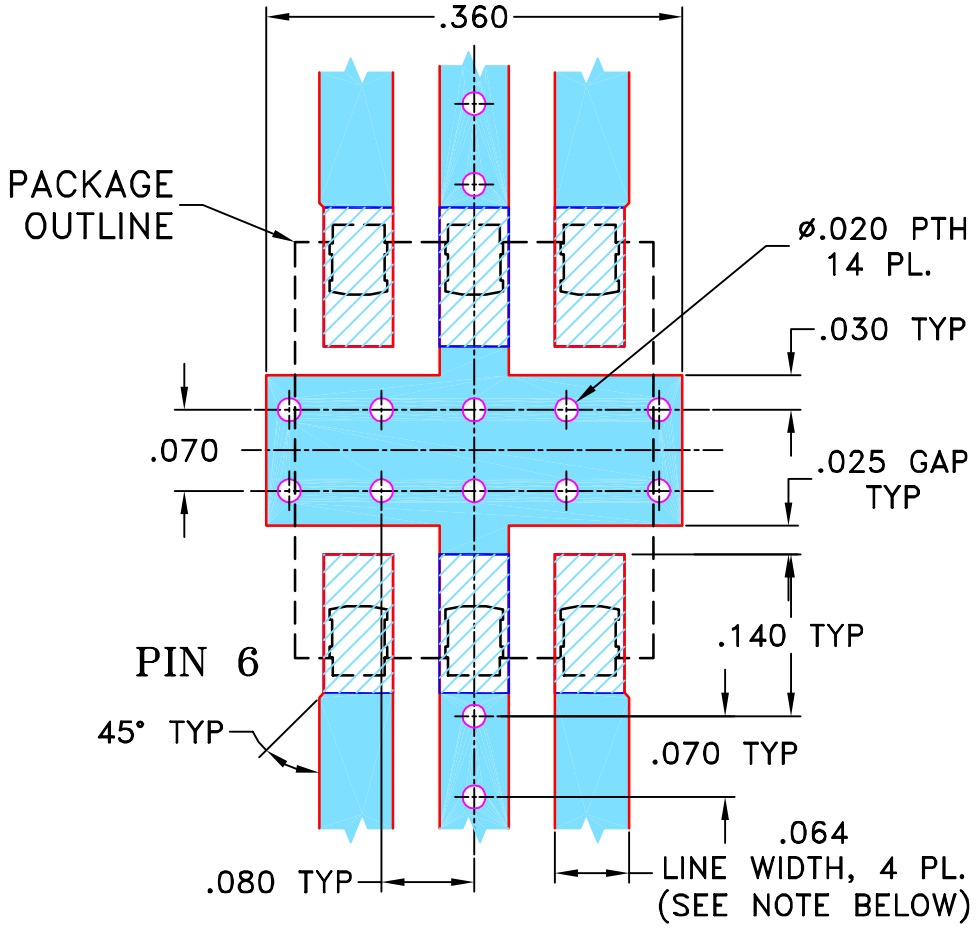

NOTE:

1. TRACE WIDTH IS SHOWN FOR ROGERS RO4350B WITH DIELECTRIC THICKNESS .030" ± .002"; COPPER: 1/2 OZ. EACH SIDE. FOR OTHER MATERIALS TRACE WIDTH MAY NEED TO BE MODIFIED.
2. BOTTOM SIDE OF THE PCB IS CONTINUOUS GROUND PLANE.

DENOTES PCB COPPER LAYOUT WITH SMOBC (SOLDER MASK OVER BARE COPPER)

DENOTES COPPER LAND PATTERN FREE OF SOLDER MASK

UNLESS OTHERWISE SPECIFIED		INITIALS	DATE
DIMENSIONS ARE IN INCHES	DRAWN	GF	09/18/03
TOLERANCES ON:	CHECKED	IL	10/20/03
2 PL DECIMALS ±	APPROVED	HY	10/20/03
3 PL DECIMALS ± .005			
ANGLES ± 1°			
FRACTIONS ±			

Mini-Circuits®

ASHEETA1.DWG REV:A DATE:01/12/95

Mini-Circuits®

13 Neptune Avenue
Brooklyn NY 11235

PL, ay/lr, QQQ569, LRPQ-J, TB-226

SIZE	CODE IDENT	DRAWING NO:	REV:
A	15542	98-PL-140	B

FILE:	SCALE:	SHEET:
98PL140	6:1	1 OF 1

Evaluation Board and Circuit

For Pin Connections refer to Data Sheet of the DUT

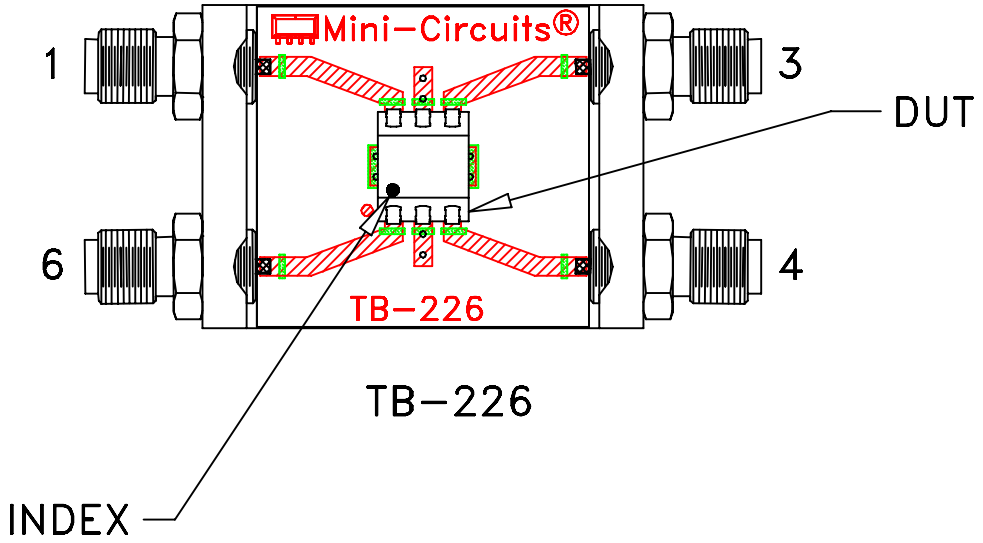

TB-226

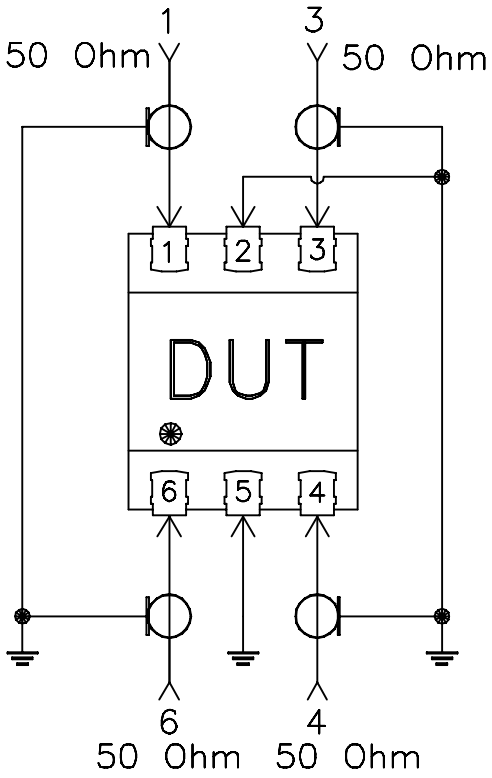

Schematic Diagram

Notes:

1. SMA Female connectors.
2. PCB Material: Rogers RO4350 or equivalent, Dielectric Constant=3.5, Thickness=.030 inch.

Mini-Circuits®

Mini-Circuits

Environmental Specifications ENV02T1

All Mini-Circuits products are manufactured under exacting quality assurance and control standards, and are capable of meeting published specifications after being subjected to any or all of the following physical and environmental test.

Specification	Test/Inspection Condition	Reference/Spec
Operating Temperature	-40° to 85°C Ambient Environment	Individual Model Data Sheet
Storage Temperature	-55° to 100° C Ambient Environment	Individual Model Data Sheet
Humidity	90 to 95% RH, 240 hours, 50°C	MIL-STD-202, Method 103, Condition A, Except 50°C and end-point electrical test done within 12 hours
Thermal Shock	-55° to 100°C, 100 cycles	MIL-STD-202, Method 107, Condition A-3, except +100°C
Solder Reflow Heat	Sn-Pb Eutetic Process: 225°C peak Pb-Free Process 245° - 250°C peak	J-STD-020, Table 4-1, 4-2 and 5-2, Figure 5-1
Solderability	10X Magnification	J-STD-002, 95% Coverage
Vibration (High Frequency)	20g peak, 10-2000 Hz, 12 times in each of three perpendicular directions (total 36)	MIL-STD-202, Method 204, Condition D
Mechanical Shock	50g, 11 ms, 1/2-sine, 18 shocks: 3 each direction, each of 3 axes	MIL-STD-202, Method 213, Condition A
Marking Resistance to Solvents	Isopropyl alcohol + mineral spirits at 25°C; terpene defluxer at 25°C; distilled water + proylene glycol monomethyl ether + monoethanolamine at 63°C to 70°C	MIL-STD-202, Method 215