Surface Mount

Voltage Controlled Oscillator

ROS-2260W+

Wide Band 1290 to 2260 MHz

CASE STYLE: CK605

Features

- Wide band frequency range
- High power output, +9.2 dBm typ.
- Low phase noise
- Low pulling
- Low pushing
- Aqueous washable

Applications

- Wireless communications
- Digital TV / UHF band
- Radar receiver
- Satellite systems

+RoHS Compliant

The +Suffix identifies RoHS Compliance. See our web site for RoHS Compliance methodologies and qualifications

Electrical Specifications

MODEL NO.	FREQ. (MHz)		POWER OUTPUT (dBm)	PHASE NOISE dBc/Hz SSB at offset frequencies,kHz Typ.				TUNING VOLTAGE RANGE (V)		SENSI-TIVITY (MHz/V)	PORT CAP (pF)	3 dB MODULATION BANDWIDTH (MHz)	NON HARMONIC SPURIOUS (dBc)	HARMONICS (dBc)		PULLING pk-pk @12 dBr (MHz)	PUSHING (MHz/V)	DC OPERATING POWER Vcc (volts)	Current (mA)
	Min.	Max.	Typ.	1	10	100	1000	Min.	Max.	Typ.	Typ.	Typ.	Typ.	Typ.	Max.	Typ.	Typ.		Max.
ROS-2260W+	1290	2260	+9.2	-74	-100	-121	-141	0.5	20	48 - 79	60	35	-90	-20	-10	1.5	1.8	5	45

Pin Connections

RF OUT	10
VCC	14
V-TUNE	2
GROUND	1,3,4,5,6,7,8,9,11,12,13,15,16

Maximum Ratings

Operating Temperature	-55°C to 85°C
Storage Temperature	-55°C to 100°C
Absolute Max. Supply Voltage (Vcc)	7V
Absolute Max. Tuning Voltage (Vtune)	22V
All specifications	50 ohm system

Permanent damage may occur if any of these limits are exceeded.

Outline Drawing

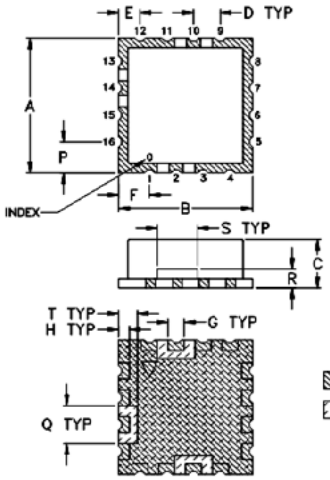

PCB Land Pattern

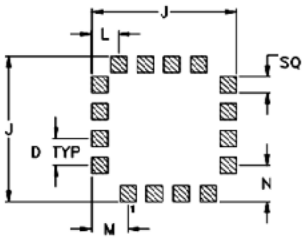

Suggested Layout,
Tolerance to be within ±.002

METALLIZATION

SOLDER RESIST

Demo Board MCL P/N: TB-10
Suggested PCB Layout (PL-012)

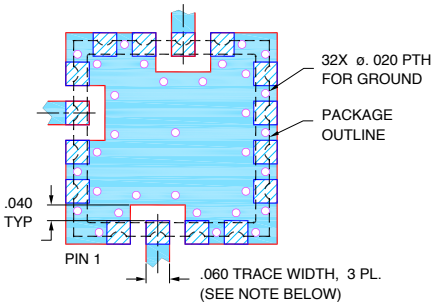

NOTES:
1. TRACE WIDTH IS SHOWN FOR RF4 WITH DIELECTRIC THICKNESS . 030" ± .002"'; COPPER: 1/2 OZ. EACH SIDE. FOR OTHER MATERIALS TRACE WIDTH MAY NEED TO BE MODIFIED.
2. BOTTOM SIDE OF THE PCB IS CONTINUOUS GROUND PLANE.

DENOTES PCB COPPER LAYOUT WITH SMOBC (SOLDER MASK OVER BARE COPPER)

DENOTES COPPER LAND PATTERN FREE OF SOLDER MASK

Outline Dimensions (inch / mm)

A	B	C	D	E	F	G	H	J	K	L	M	N	P	Q	R	S	T	wt.
.500	.500	.180	.100	.080	.115	.060	.040	.540	.060	.100	.135	.135	.115	.140	.070	.150	.070	grams
12.70	12.70	4.57	2.54	2.03	2.92	1.52	1.02	13.72	1.52	2.54	3.43	3.43	2.92	3.56	1.78	3.81	1.78	1.0

Notes
A. Performance and quality attributes and conditions not expressly stated in this specification document are intended to be excluded and do not form a part of this specification document.
B. Electrical specifications and performance data contained in this specification document are based on Mini-Circuit's applicable established test performance criteria and measurement instructions.
C. The parts covered by this specification document are subject to Mini-Circuits standard limited warranty and terms and conditions (collectively, "Standard Terms"); Purchasers of this part are entitled to the rights and benefits contained therein. For a full statement of the Standard Terms and the exclusive rights and remedies thereunder, please visit Mini-Circuits' website at www.minicircuits.com/MCLStore/terms.jsp

Mini-Circuits®

www.minicircuits.com P.O. Box 350166, Brooklyn, NY 11235-0003 (718) 934-4500 sales@minicircuits.com

Performance Data & Curves*

ROS-2260W+

V TUNE	TUNE SENS (MHz/V)	FREQUENCY (MHz)			POWER OUTPUT (dBm)			Icc (mA)	HARMONICS (dBc)			FREQ. PUSH (MHz/V)	FREQ. PULL (MHz)	PHASE NOISE (dBc/Hz) at offsets				FREQ OFFSET (KHz)	PHASE NOISE at 1775 MHz (dBc/Hz)
		-55°C	+25°C	+85°C	-55°C	+25°C	+85°C		F2	F3	F4			1kHz	10kHz	100kHz	1MHz		
0.00	104.10	1159.4	1142.3	1128.0	8.62	9.17	9.39	35.14	-15.8	-17.0	-30.2	0.65	0.89	-72.5	-98.6	-119.4	-139.1	1.0	-74.33
0.50	89.61	1210.0	1194.3	1181.5	8.59	9.23	9.51	35.33	-16.1	-17.5	-30.5	0.91	1.25	-75.2	-98.9	-119.7	-139.5	2.0	-83.53
1.00	83.37	1254.6	1239.1	1226.2	8.44	9.03	9.38	35.49	-15.8	-17.7	-30.0	1.09	1.19	-74.9	-98.9	-119.8	-139.5	3.5	-89.99
1.50	79.70	1296.3	1280.8	1267.9	8.71	9.29	9.47	35.65	-16.3	-18.4	-29.7	1.21	1.24	-74.5	-99.5	-120.4	-140.2	6.0	-95.71
2.00	77.47	1336.1	1320.7	1307.5	8.64	9.34	9.63	35.82	-16.6	-19.2	-29.3	1.35	1.31	-74.0	-100.0	-120.4	-140.4	8.5	-99.21
3.00	74.79	1413.0	1397.5	1384.1	8.63	9.36	9.69	36.14	-16.9	-20.4	-26.5	1.62	1.28	-74.8	-99.9	-120.9	-140.9	10.0	-100.89
4.00	73.31	1488.0	1472.0	1458.5	9.04	9.60	9.74	36.39	-18.1	-21.8	-25.7	1.87	1.45	-75.4	-100.1	-121.0	-141.1	20.8	-108.20
6.00	69.69	1631.3	1615.8	1602.2	9.17	9.73	9.84	36.81	-16.5	-24.0	-24.5	2.11	1.06	-75.2	-101.1	-121.9	-141.9	35.5	-113.09
7.00	68.17	1700.3	1684.8	1671.4	9.33	9.89	9.99	36.85	-16.2	-25.6	-24.1	2.17	1.27	-75.7	-100.5	-122.0	-141.9	60.7	-117.83
8.00	66.89	1767.4	1752.2	1739.0	9.22	9.54	9.58	36.83	-16.5	-26.4	-32.5	2.12	1.52	-74.1	-101.2	-122.5	-142.2	86.7	-121.20
8.50	65.74	1800.6	1785.7	1772.8	9.30	9.79	9.72	36.78	-16.8	-27.0	-36.4	2.07	1.56	-74.3	-101.0	-122.6	-142.4	100.0	-122.40
9.00	65.57	1833.4	1818.6	1805.9	9.25	9.74	9.75	36.78	-17.0	-27.5	-32.0	2.06	1.64	-74.4	-101.0	-122.7	-142.5	148.1	-125.84
10.00	65.10	1898.6	1883.9	1871.7	8.97	9.56	9.55	36.61	-18.0	-28.4	-28.7	1.86	1.35	-74.6	-100.8	-122.5	-142.7	177.0	-127.37
12.00	62.06	2026.0	2011.8	2000.0	8.62	9.22	9.24	36.34	-21.0	-32.5	-31.7	1.45	0.92	-72.2	-99.6	-121.7	-142.0	211.6	-128.92
14.00	56.44	2146.4	2132.6	2121.1	8.14	8.58	8.55	36.13	-26.8	-32.8	-34.2	0.97	1.90	-69.2	-98.1	-120.5	-140.9	302.4	-132.25
15.50	51.50	2229.1	2215.5	2204.2	7.57	8.15	8.14	36.00	-30.7	-35.7	-40.5	0.62	0.47	-70.7	-98.3	-120.3	-140.7	361.5	-133.78
16.00	49.89	2255.2	2241.2	2230.2	7.37	7.89	7.91	35.93	-31.3	-34.4	-43.5	0.52	2.38	-70.1	-97.9	-119.9	-140.6	507.5	-136.56
17.00	44.98	2303.6	2289.8	2278.8	7.41	7.87	7.74	35.86	-31.1	-49.7	-43.9	0.18	0.38	-70.6	-98.1	-120.2	-140.9	606.7	-138.22
18.50	36.60	2367.5	2353.4	2342.0	6.86	7.44	7.47	35.71	-29.0	-26.0	-48.3	0.17	0.38	-72.1	-98.3	-120.1	-140.6	851.6	-141.12
20.00	27.96	2417.9	2403.4	2392.2	6.43	7.03	7.05	35.61	-28.5	-25.2	-56.7	0.00	2.38	-73.3	-99.1	-120.7	-141.1	1000.0	-142.45

*at 25°C unless mentioned otherwise

ROS-2260W+
Frequency and Tuning Sensitivity

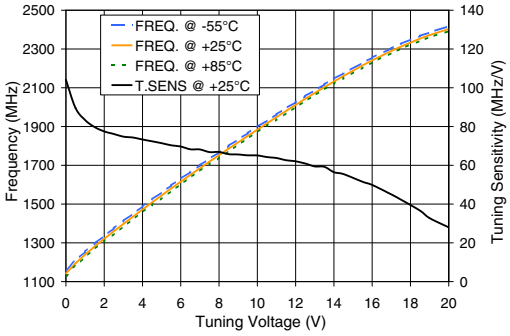

ROS-2260W+
Power Output

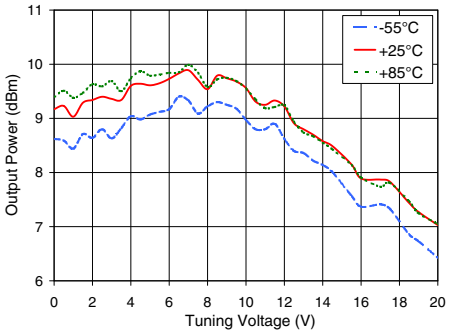

ROS-2260W+
Harmonics Level

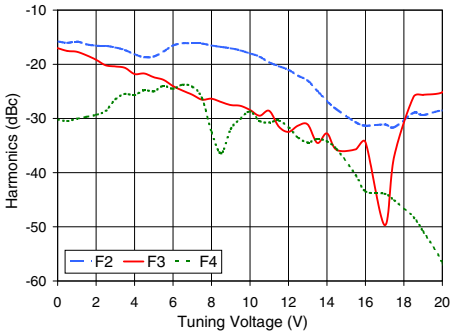

ROS-2260W+
Frequency Pulling & Pushing (Vcc ± 5%)

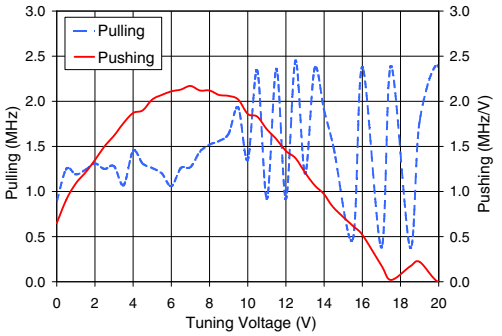

ROS-2260W+
Phase Noise Vs. Tuning Voltage

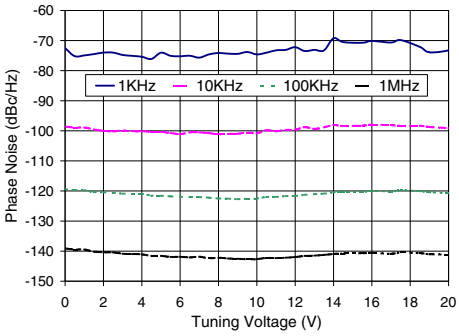

ROS-2260W+
Phase Noise

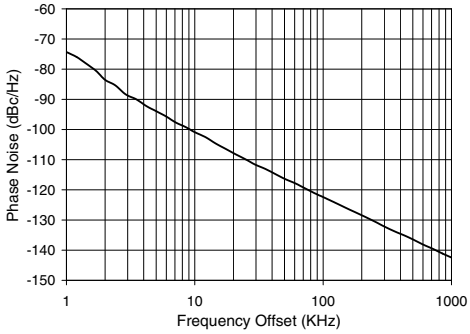

Notes
A. Performance and quality attributes and conditions not expressly stated in this specification document are intended to be excluded and do not form a part of this specification document.
B. Electrical specifications and performance data contained in this specification document are based on Mini-Circuit's applicable established test performance criteria and measurement instructions.
C. The parts covered by this specification document are subject to Mini-Circuits standard limited warranty and terms and conditions (collectively, "Standard Terms"); Purchasers of this part are entitled to the rights and benefits contained therein. For a full statement of the Standard Terms and the exclusive rights and remedies thereunder, please visit Mini-Circuits' website at www.minicircuits.com/MCLStore/terms.jsp

Mini-Circuits®
www.minicircuits.com P.O. Box 350166, Brooklyn, NY 11235-0003 (718) 934-4500 sales@minicircuits.com

Voltage Controlled Oscillator ROS-2260W+

Typical Performance Data

V TUNE	TUNE SENS (MHz/V)	FREQUENCY (MHz)			POWER OUTPUT (dBm)			HARMONICS (dBc)			FREQ. PUSH (MHz/V)
		-55ºC	+25ºC	+85ºC	-55ºC	+25ºC	+85ºC	F2	F3	F4	
0.0	104.10	1159.4	1142.3	1128.0	8.62	9.17	9.39	-15.8	-17.0	-30.2	0.65
0.5	89.61	1210.0	1194.3	1181.5	8.59	9.23	9.51	-16.1	-17.5	-30.5	0.91
1.0	83.37	1254.6	1239.1	1226.2	8.44	9.03	9.38	-15.8	-17.7	-30.0	1.09
1.5	79.70	1296.3	1280.8	1267.9	8.71	9.29	9.47	-16.3	-18.4	-29.7	1.21
2.0	77.47	1336.1	1320.7	1307.5	8.64	9.34	9.63	-16.6	-19.2	-29.3	1.35
2.5	76.17	1375.1	1359.4	1346.0	8.80	9.40	9.59	-16.6	-20.2	-28.6	1.50
3.0	74.79	1413.0	1397.5	1384.1	8.63	9.36	9.69	-16.9	-20.4	-26.5	1.62
3.5	74.34	1450.5	1434.9	1421.3	8.82	9.34	9.50	-17.4	-20.7	-25.5	1.76
4.0	73.31	1488.0	1472.0	1458.5	9.04	9.60	9.74	-18.1	-21.8	-25.7	1.87
4.5	72.39	1524.4	1508.7	1495.1	8.98	9.64	9.87	-18.7	-21.7	-24.8	1.90
5.0	71.43	1560.6	1544.9	1531.3	9.07	9.61	9.79	-18.6	-22.4	-25.0	2.02
5.5	70.33	1596.2	1580.6	1567.0	9.12	9.65	9.81	-17.7	-22.9	-24.0	2.07
6.0	69.69	1631.3	1615.8	1602.2	9.17	9.73	9.84	-16.5	-24.0	-24.5	2.11
6.5	68.28	1666.0	1650.6	1637.1	9.40	9.83	9.85	-16.1	-24.9	-23.8	2.13
7.0	68.17	1700.3	1684.7	1671.4	9.33	9.89	9.99	-16.2	-25.6	-24.1	2.17
7.5	66.80	1733.8	1718.8	1705.5	9.09	9.71	9.84	-16.2	-26.5	-26.2	2.12
8.0	66.89	1767.4	1752.2	1739.0	9.22	9.54	9.58	-16.5	-26.4	-32.5	2.12
8.5	65.74	1800.6	1785.7	1772.7	9.30	9.79	9.72	-16.8	-27.0	-36.4	2.07
9.0	65.57	1833.4	1818.6	1805.9	9.25	9.74	9.75	-17.0	-27.5	-32.0	2.06
9.5	65.13	1866.2	1851.3	1838.9	9.18	9.68	9.69	-17.4	-27.7	-30.1	2.02
10.0	65.10	1898.6	1883.9	1871.7	8.97	9.56	9.55	-18.0	-28.4	-28.7	1.86
10.5	64.27	1931.0	1916.4	1904.2	8.80	9.31	9.35	-18.6	-29.5	-30.5	1.83
11.0	63.78	1962.9	1948.6	1936.5	8.80	9.25	9.19	-19.6	-28.6	-30.8	1.69
11.5	62.62	1994.6	1980.5	1968.5	8.90	9.33	9.21	-20.4	-31.5	-30.4	1.58
12.0	62.06	2026.0	2011.8	2000.0	8.62	9.22	9.24	-21.0	-32.5	-31.7	1.45
12.5	60.92	2057.2	2042.8	2031.2	8.40	8.91	8.94	-22.1	-31.3	-33.5	1.37
13.0	59.41	2087.3	2073.3	2061.8	8.36	8.80	8.74	-23.0	-31.1	-34.4	1.21
13.5	59.21	2117.4	2103.0	2091.6	8.22	8.70	8.67	-24.9	-34.5	-33.8	1.07
14.0	56.44	2146.4	2132.6	2121.1	8.14	8.58	8.55	-26.8	-32.8	-34.2	0.97
14.5	55.46	2174.7	2160.8	2149.5	8.01	8.49	8.43	-28.3	-35.8	-35.6	0.82
15.5	51.50	2229.1	2215.5	2204.2	7.57	8.15	8.14	-30.7	-35.7	-40.5	0.62
16.0	49.89	2255.2	2241.2	2230.2	7.37	7.89	7.91	-31.3	-34.4	-43.5	0.52
17.0	44.98	2303.6	2289.8	2278.8	7.41	7.87	7.74	-31.1	-49.7	-43.9	0.18
17.5	42.29	2326.2	2312.2	2301.2	7.33	7.83	7.81	-31.6	-37.0	-45.1	0.02
18.5	36.60	2367.5	2353.4	2342.0	6.86	7.44	7.47	-29.0	-26.0	-48.3	0.17
19.0	32.77	2385.5	2371.7	2360.6	6.73	7.27	7.25	-29.4	-25.7	-50.8	0.22
20.0	27.96	2417.9	2403.4	2392.2	6.43	7.03	7.05	-28.5	-25.2	-56.7	0.00
20.5	25.69	2431.9	2417.4	2405.9	6.31	6.91	6.97	-29.4	-22.9	-63.4	0.21
21.5	19.99	2455.5	2441.6	2430.2	6.20	6.74	6.71	-28.6	-22.6	-63.3	0.73
22.0	19.99	2466.0	2451.6	2440.6	6.23	6.70	6.68	-29.6	-21.2	-69.8	0.95

FREQ OFFSET (KHz)	PHASE NOISE (dBc/Hz)
1	-74
10	-101
100	-122
1000	-142

Mini-Circuits®
IF/RF MICROWAVE COMPONENTS • ISO 9001 ISO 14001 AS 9100 CERTIFIED RoHS compliant
P.O. Box 350166, Brooklyn, New York 11235-0003 (718) 934-4500 Fax (718) 332-4661
YONI2 Patent Pending The Design Engineers Search Engine finds the model you need, Instantly • For detailed performance specs & shopping online see minicircuits.com

Voltage Controlled Oscillator ROS-2260W+

Typical Performance Data

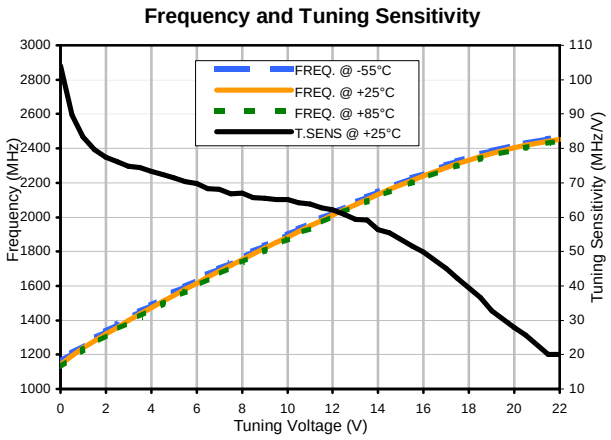

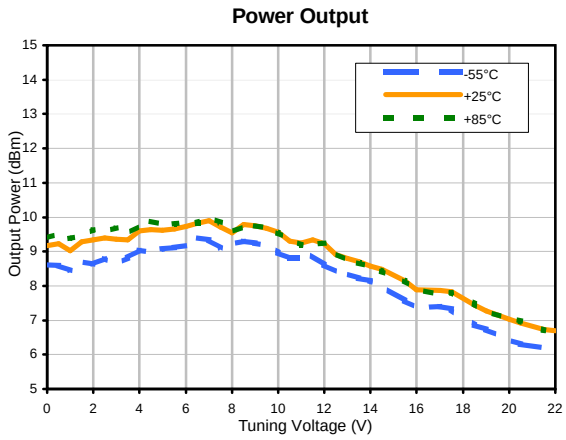

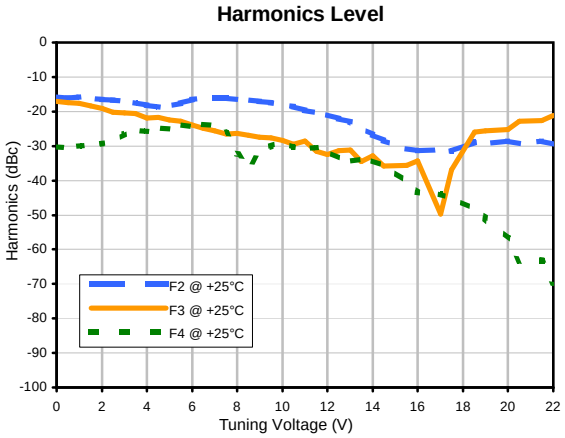

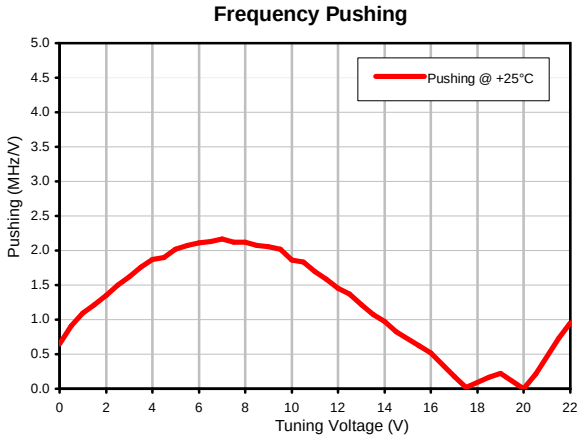

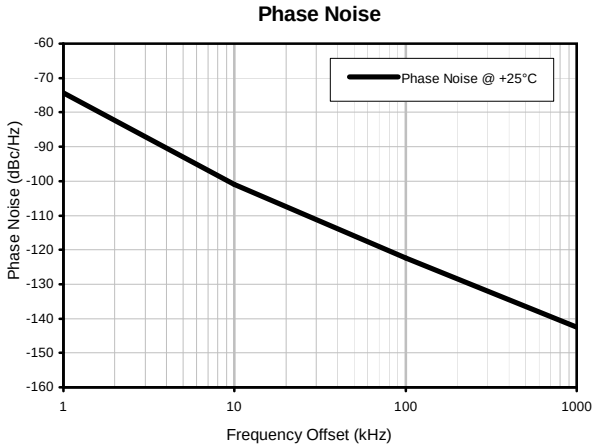

REV. X1
ROS-2260W+
100222
Page 1 of 1

Case Style CK

CK605

Outline Dimensions

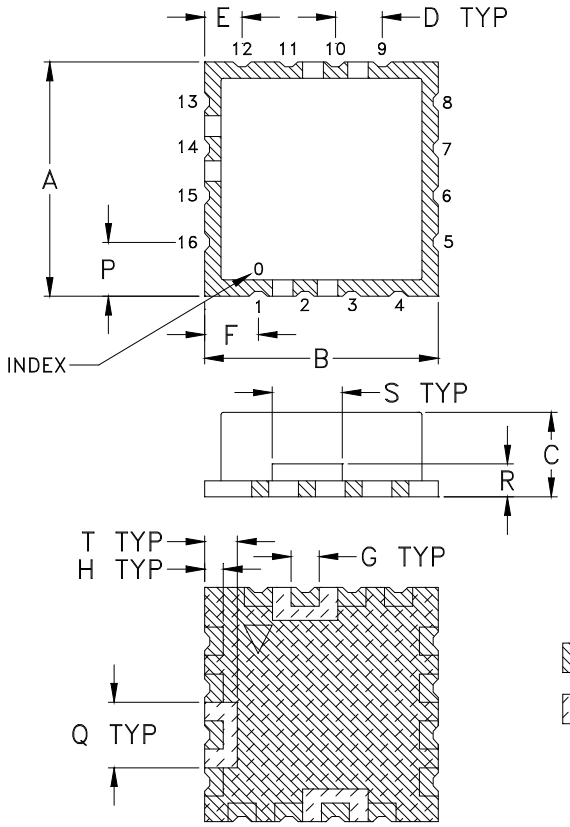

PCB Land Pattern

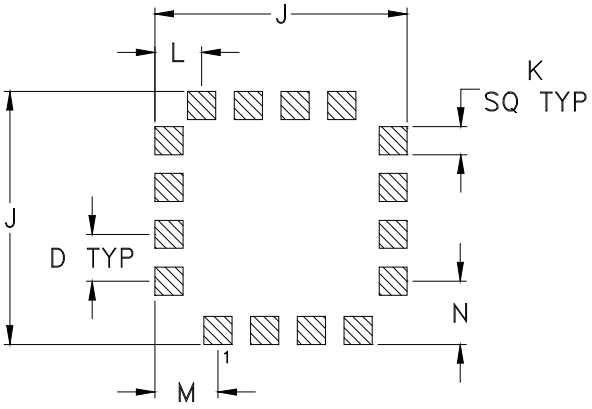

Suggested Layout,
Tolerance to be within ±.002

METALLIZATION

SOLDER RESIST

CASE #	A	B	C	D	E	F	G	H	J	K
CK605	.500 (12.70)	.500 (12.70)	.180 (4.57)	.100 (2.54)	.080 (2.03)	.115 (2.92)	.060 (1.52)	.040 (1.02)	.540 (13.72)	.060 (1.52)

CASE #	L	M	N	P	Q	R	S	T	WT. GRAM	
CK605	.100 (2.54)	.135 (3.43)	.135 (3.43)	.115 (2.92)	.140 (3.56)	.070 (1.78)	.150 (3.81)	.070 (1.78)	1.2	+0.5 -0.0

Dimensions are in inches (mm). Tolerances: 2 Pl. ± .03; 3Pl. ± .015

Notes:

1. Case material: Nickel-Silver alloy.
2. Base: Printed wiring laminate.
3. Termination finish:
   For RoHS Case Styles: 3-5 µ inch (.08-.13 microns) Gold over 120-240 µ inch (3.05-6.10 microns) Nickel plate. All models, (+) suffix.

This document and its contents are the property of Mini-Circuits

Tape & Reel Packaging TR-F37

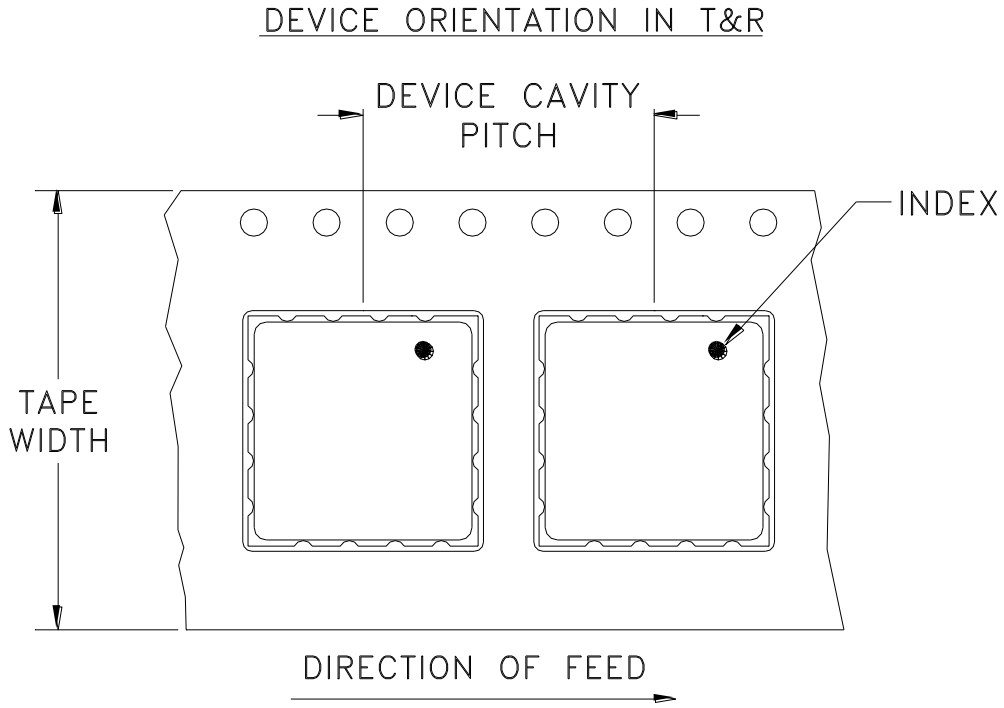

Tape Width, mm	Device Cavity Pitch, mm	Reel Size, inches	Devices per Reel	
24	16	7	Small quantity standards (see note)	10
				20
				50
				100
		13	Standard	200
				500

Note: Please consult individual model data sheet to determine device per reel availability.

Mini-Circuits carrier tape materials provide protection from ESD (Electro-Static Discharge) during handling and transportation. Tapes are static dissipative and comply with industry standards EIA-481/EIA-541.

Go to: www.minicircuits.com/pages/pdfs/tape.pdf

Mini-Circuits®
INTERNET http://www.minicircuits.com
P.O. Box 350166, Brooklyn, New York 11235-0003 (718) 934-4500 Fax (718) 332-4661
Distribution Centers NORTH AMERICA 800-654-7949 • 417-335-5935 • Fax 417-335-5945 • EUROPE 44-1252-832600 • Fax 44-1252-837010
Mini-Circuits ISO 9001 & ISO 14001 Certified

This document and its contents are the property of Mini-Circuits.

THIRD ANGLE PROJECTION

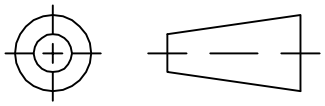

REVISIONS

REV	ECN No.	DESCRIPTION	DATE	DR	AUTH
E	M105563	ADDED "rl" PIN CONNECTION	06/02/06	MMG	DJ
F	M105640	CORRECTED NOTE 2	06/08/06	MMG	MM
G	M124395	ADDED "RAMP"	09/09	EM	HH
G	R77589	ADDED "RAMP"	09/09	EM	HH

SUGGESTED MOUNTING CONFIGURATION FOR CK605 CASE STYLE, "kg/rl/16AM01" PIN CONNECTION

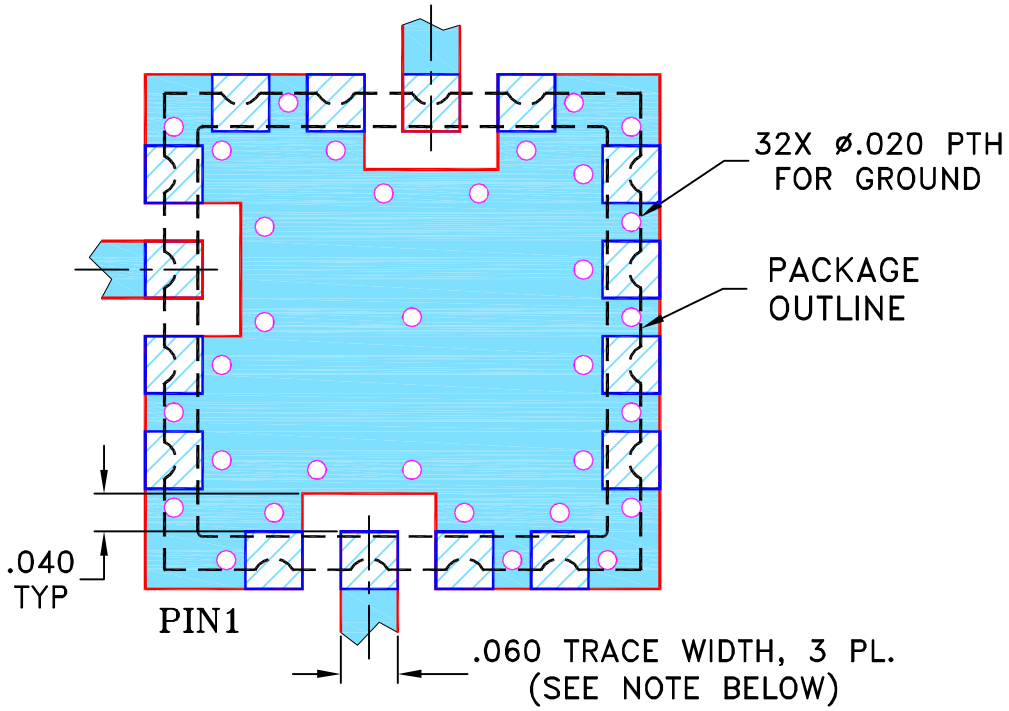

NOTES:

1. TRACE WIDTH IS SHOWN FOR FR4 WITH DIELECTRIC THICKNESS .030" ± .002"; COPPER: 1/2 OZ. EACH SIDE. FOR OTHER MATERIALS TRACE WIDTH MAY NEED TO BE MODIFIED.
2. BOTTOM SIDE OF THE BOTTOM IS CONTINUOUS GROUND PLANE.

DENOTES PCB COPPER LAYOUT WITH SMOBC (SOLDER MASK OVER BARE COPPER)

DENOTES COPPER LAND PATTERN FREE OF SOLDER MASK

UNLESS OTHERWISE SPECIFIED		INITIALS	DATE
DIMENSIONS ARE IN INCHES	DRAWN	AV	08/07/00
TOLERANCES ON:	CHECKED	SK	08/08/00
2 PL DECIMALS ±	APPROVED	DB	08/08/00
3 PL DECIMALS ± .005			
ANGLES ±			
FRACTIONS ±			

Mini-Circuits®

THIS DOCUMENT AND ITS CONTENTS ARE THE PROPERTY OF MINI-CIRCUITS. EXCEPT FOR USE EXPRESSLY GRANTED, IN WRITING, TO ITS VENDORS, VENDEE AND THE UNITED STATES GOVERNMENT, MINI-CIRCUITS RESERVES ALL PROPRIETARY DESIGN, USE , MANUFACTURING AND REPRODUCTION RIGHTS THERETO. THESE CONTENTS SHALL NOT BE USED, DUPLICATED OR DISCLOSED TO ANY OUTSIDE PARTY, IN WHOLE OR IN PART, WITHOUT WRITTEN PERMISSION OF MINI-CIRCUITS.

ASHEETA1.DWG REV:A DATE:01/12/95

Mini-Circuits® 13 Neptune Avenue Brooklyn NY 11235

PL,kg/rl/16AM01,CK605,ROS/LAVI/RAMP

SIZE	CODE IDENT	DRAWING NO:	REV:
A	15542	98-PL-012	G

FILE:	SCALE:	SHEET:
98PL012	5:1	1 OF 1

Evaluation Board and Circuit

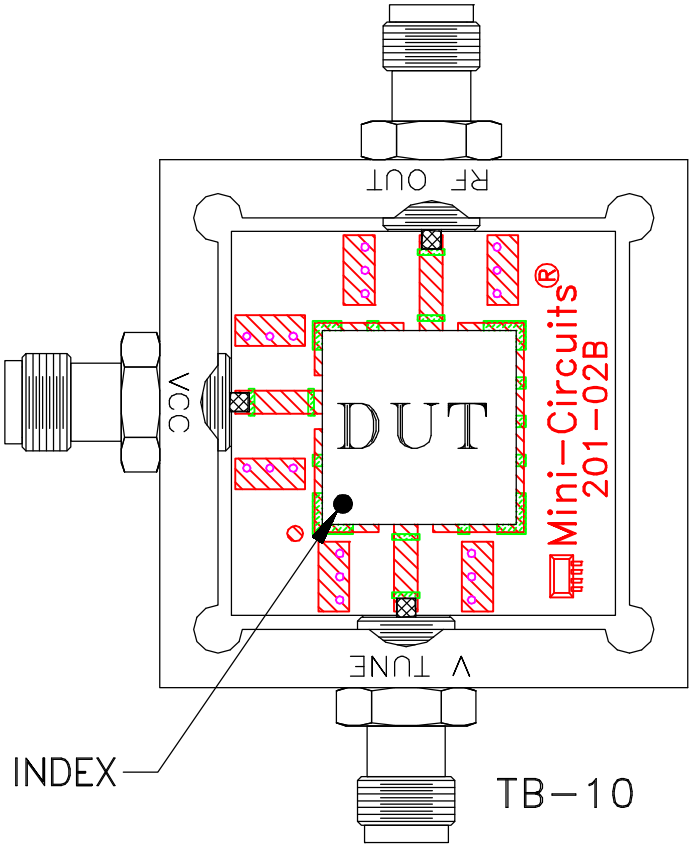

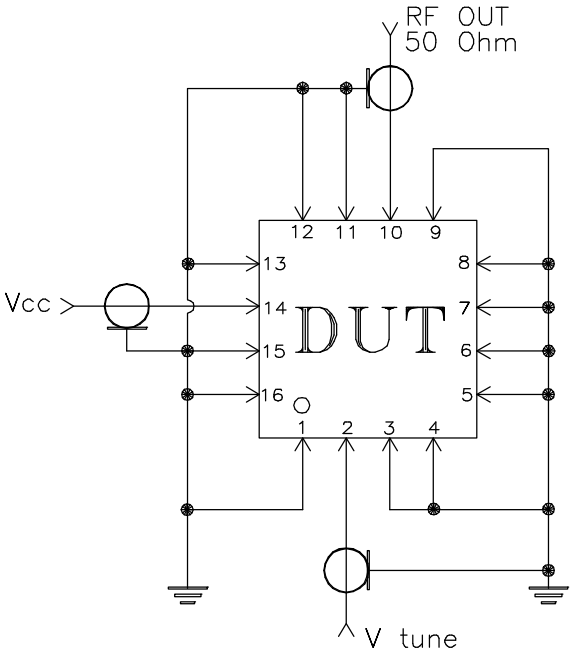

Schematic Diagram

Notes:

1. SMA Female connectors.
2. PCB Material: Rogers RO4350 or equivalent, Dielectric Constant=3.5, Thickness=.030 inch.

Mini-Circuits®

THIS DOCUMENT AND ITS CONTENTS ARE THE PROPERTY OF MINI-CIRCUITS.

Mini-Circuits

Environmental Specifications ENV65

All Mini-Circuits products are manufactured under exacting quality assurance and control standards, and are capable of meeting published specifications after being subjected to any or all of the following physical and environmental test.

Specification	Test/Inspection Condition	Reference/Spec
Operating Temperature	-55° to 85°C Ambient Environment	Individual Model Data Sheet
Storage Temperature	-55° to 100° C Ambient Environment	Individual Model Data Sheet
Humidity	90 to 95% RH, 240 hours, 50°C	MIL-STD-202, Method 103, Condition A, Except 50°C and end-point electrical test done within 12 hours
Thermal Shock	-55° to 100°C, 100 cycles	MIL-STD-202, Method 107, Condition A-3, except +100°C
Solder Reflow Heat	Sn-Pb Eutectic Process: 225°C peak Pb-Free Process, 245°C peak	J-STD-020, Table 4-1, 4-2 and 5-2, Figure 5-1
Solderability	10X Magnification	J-STD-002, Para 4.2.5, Test S, 95% Coverage
Vibration (High Frequency)	20g peak, 20-2000 Hz, 4 times in each of three axes (total 12)	MIL-STD-883, Method 2007.3, Condition A
Mechanical Shock	50g, 11 ms, 1/2-sine, 18 shocks: 3 each direction, each of 3 axes	MIL-STD-202, Method 213, Condition A
Marking Resistance to Solvents	Isopropyl alcohol + mineral spirits at 25°C; terpene defluxer at 25°C; distilled water + proylene glycol monomethyl ether + monoethanolamine at 63°C to 70°C	MIL-STD-202, Method 215

This document and its contents are the property of Mini-Circuits.