SPDT RF SWITCH

50Ω DC-3000 MHz

Absorptive RF Switch with internal driver. Single Supply Voltage , +3V

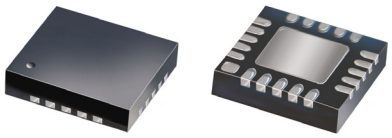

Product Features

- Very Low Insertion loss over entire frequency range
- Super High Isolation over entire frequency range
- High Input IP3, +55 dBm typ.
- Single positive supply voltage, +3V
- Very low DC current consumption, 8μA
- Immune to latch up
- Unique design-simultaneous switch off of RF1&RF2

HSWA2-30DR+

CASE STYLE: DG983-1

+RoHS Compliant
The +Suffix identifies RoHS Compliance. See our web site for RoHS Compliance methodologies and qualifications

Typical Applications

- Base Station Infrastructure
- Portable Wireless
- CATV & DBS
- MMDS & Wireless LAN
- Band switch
- Diplexer switches
- Bypass switches

General Description

The HSWA2-30DR+ is a 50Ω high isolation SPDT RF switch designed for wireless applications, covering a broad frequency range from DC up to 3GHz with low insertion loss. The HSWA2-30DR+ operates on a single supply voltage +3V. See application note AN-80-006 for +5V supply voltage. This unit includes an internal CMOS control driver with two-pins control. The switch consumes very low supply current, 8 μA typ. The HSWA2-30DR+ switch is in a very small size and low profile package, 4x4mm and 0.9mm respectively.

Functional Diagram

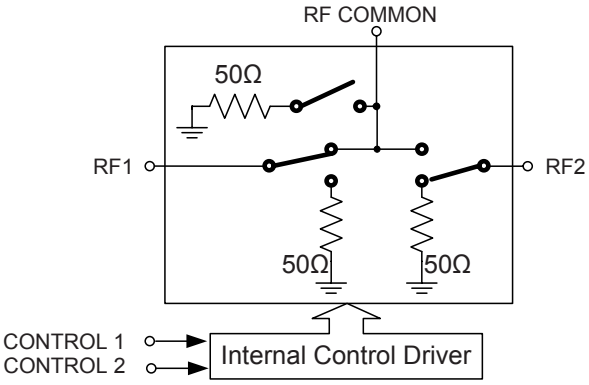

Notes
A. Performance and quality attributes and conditions not expressly stated in this specification document are intended to be excluded and do not form a part of this specification document.
B. Electrical specifications and performance data contained in this specification document are based on Mini-Circuit's applicable established test performance criteria and measurement instructions.
C. The parts covered by this specification document are subject to Mini-Circuits standard limited warranty and terms and conditions (collectively, "Standard Terms"); Purchasers of this part are entitled to the rights and benefits contained therein. For a full statement of the Standard Terms and the exclusive rights and remedies thereunder, please visit Mini-Circuits' website at www.minicircuits.com/MCLStore/terms.jsp

RF Electrical Specifications, DC-3000 MHz, T_{AMB}=25°C, V_{DD}=+3V

Parameter	Condition	Min.	Typ.	Max.	Units
Operating Frequency		DC (note 4)		3000	MHz
Insertion Loss (note 1)	1 GHz 2 GHz 3 GHz		0.75 0.95 1.2	1.0 1.2 1.4	dB
Isolation between Common port and RF1/RF2 ports	1 GHz 2 GHz 3 GHz	55 46 40	64 50 44		dB
Isolation between RF1 and RF2 ports	1 GHz 2 GHz 3 GHz	57 54 40	63 60 48		dB
Return Loss @ Common port	1 GHz 2 GHz 3 GHz		20 17 14		dB
Return Loss @ RF1/RF2 ports	1 GHz 2 GHz 3 GHz		20 18 17		dB
Input IP2	5 MHz - 1000 MHz		+80		dBm
Input IP3 (note 2)	10 MHz - 1000MHz 1000MHz - 3000MHz		+55 +52		dBm
Input 1dB Compression (note 2,3)	1000 MHz	+29	+31		dBm

Notes:
1. I.LOSS values are de-embedded from test board Loss.
2. Device linearity degrades below 1 MHz.
3. Note absolute maximum ratings for input power.
4. Lowest Freq. determined by value of coupling capacitors at RF ports.

DC Electrical Specifications

Parameter	Min.	Typ.	Max.	Units
V_{DD}, Supply Voltage (note 5)	2.7	3	3.3	V
Supply Current (V_{DD} = 3V) (note 6)	—	8	20	μA
Control Voltage Low	0	—	0.3xV_{DD}	V
Control Voltage High	0.7xV_{DD}	—	V_{DD}	V

Note 5: See application note AN-80-006 for +5V supply voltage.
Note 6: At Control Frequency of 1 kHz. Increases to 21 μA at 10 kHz and 56 μA at 50 kHz typically.

Switching Specifications

Parameter	Min.	Typ.	Max.	Units
Switching Time, 50% CTRL to 90/10% RF	—	2.0	—	μSec
Video Feedthrough, 5 MHz - 1000 MHz (note 7)	—	—	15	mV_{p-p}

Note 7: Measured with a 1 nSec risetime,0/3V pulse and 500 MHz bandwidth.

Absolute Maximum Ratings

Parameter	Ratings
Operating Temperature	-40°C to 85°C
Storage Temperature	-65°C to 150°C
V_{DD}, Supply Voltage	-0.3V Min., 4V Max.
Voltage control	-0.3V Min., V_{DD} + 0.3V Max.
ESD, HBM (ANSI/ESD STM 5.1 - 2001)	250V to < 500V (CLASS 1A)
ESD, MM (ANSI/ESD STM 5.2 - 1999)	50V (CLASS M1)
RF input power: (note 8)	
When the common port is connected to the RF port (RF1 or RF2)	+33dBm
When the RF port (RF1 or RF2) is not connected to the common port	+24dBm
When the common port is not connected to either RF1 or RF2	+24dBm

Note 8: See Truth Table on page 3.
Permanent damage may occur if any of these limits are exceeded.

Notes
A. Performance and quality attributes and conditions not expressly stated in this specification document are intended to be excluded and do not form a part of this specification document.
B. Electrical specifications and performance data contained in this specification document are based on Mini-Circuit's applicable established test performance criteria and measurement instructions.
C. The parts covered by this specification document are subject to Mini-Circuits standard limited warranty and terms and conditions (collectively, "Standard Terms"); Purchasers of this part are entitled to the rights and benefits contained therein. For a full statement of the Standard Terms and the exclusive rights and remedies thereunder, please visit Mini-Circuits' website at www.minicircuits.com/MCLStore/terms.jsp

The RF switch control bits select the desired switch-state, as shown in **Table 1**: Truth Table.

Table 1: Truth Table.

STATE	Control Input		RF Input / Output	
	Control 1	Control 2	RF1 to RF COMMON	RF2 to RF COMMON
1	Low	Low	OFF	OFF
2	Low	High	OFF	ON
3	High	Low	ON	OFF
4	High	High	N/A	N/A

General notes:

1. When either of the RF1 or RF2 ports is closed (**ON** state), the closed port is connected to the RF Common port.
2. When either of the RF1 or RF2 ports is open (**OFF** state), the open port is connected to an internal 50Ω termination.
3. When both RF1 and RF2 ports are open (**OFF** state), the all three RF ports are connected to an internal 50Ω termination.

EXAMPLE OF STATE 3

Functional Diagram

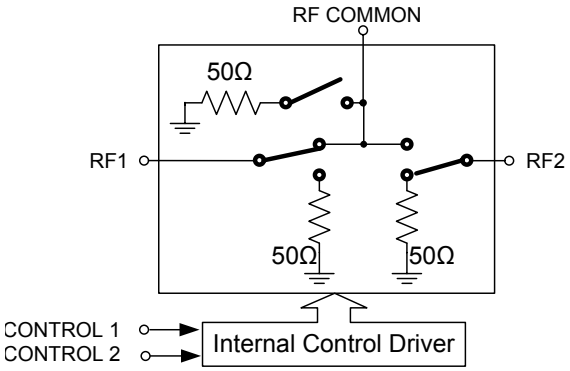

Notes
A. Performance and quality attributes and conditions not expressly stated in this specification document are intended to be excluded and do not form a part of this specification document.
B. Electrical specifications and performance data contained in this specification document are based on Mini-Circuit's applicable established test performance criteria and measurement instructions.
C. The parts covered by this specification document are subject to Mini-Circuits standard limited warranty and terms and conditions (collectively, "Standard Terms"); Purchasers of this part are entitled to the rights and benefits contained therein. For a full statement of the Standard Terms and the exclusive rights and remedies thereunder, please visit Mini-Circuits' website at www.minicircuits.com/MCLStore/terms.jsp

Pin Description

Function	Pin Number	Description
GND	1	RF Ground
GND	2	RF Ground
RF1	3	RF I/O (note 1)
GND	4	RF Ground
GND	5	RF Ground
GND	6	RF Ground
GND	7	RF Ground
RF COM	8	RF Common (note 1)
GND	9	RF Ground
GND	10	RF Ground
GND	11	RF Ground
GND	12	RF Ground
RF2	13	RF I/O (note 1)
GND	14	RF Ground
GND	15	RF Ground
Control 2	16	Control 2
Control 1	17	Control 1
GND	18	Supply Voltage Ground
GND	19	Digital Ground
VDD	20	Supply Voltage
GND	Paddle	RF Ground Pad (note 2)

Notes:
1. RF pins 3, 8 and 13 must be at 0 VDC. The RF pins do not require DC blocking capacitors for proper operation if the 0 VDC requirement is met.
2. The exposed solder pad on the bottom of the package (See Pin Configuration) must be grounded for proper device operation

Pin Configuration (Top View)

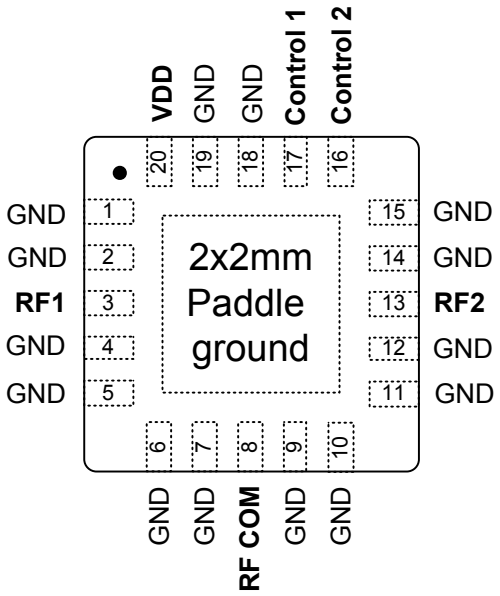

Notes
A. Performance and quality attributes and conditions not expressly stated in this specification document are intended to be excluded and do not form a part of this specification document.
B. Electrical specifications and performance data contained in this specification document are based on Mini-Circuit's applicable established test performance criteria and measurement instructions.
C. The parts covered by this specification document are subject to Mini-Circuits standard limited warranty and terms and conditions (collectively, "Standard Terms"); Purchasers of this part are entitled to the rights and benefits contained therein. For a full statement of the Standard Terms and the exclusive rights and remedies thereunder, please visit Mini-Circuits' website at www.minicircuits.com/MCLStore/terms.jsp

Typical Performance Curves over various states. For switch state see Truth Table 1 on page 3.

INSERTION LOSS Vs. FREQUENCY @ +25°C

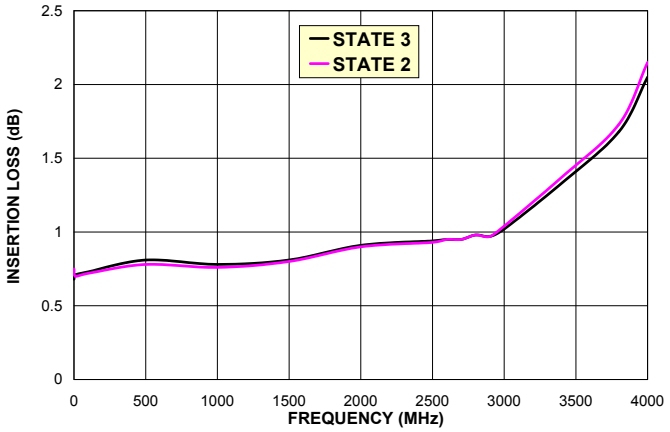

INSERTION LOSS Vs. FREQUENCY

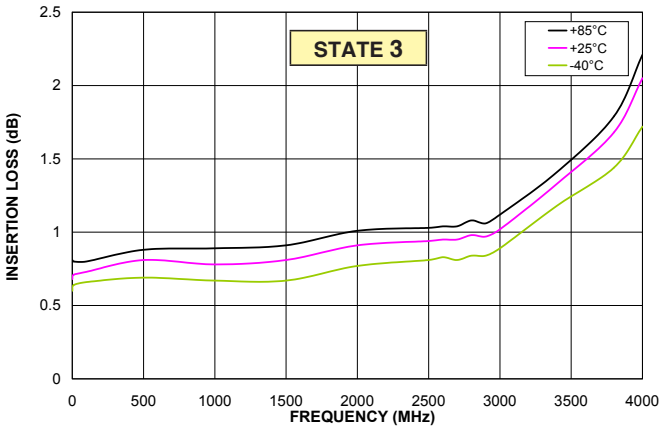

ISOLATION BETWEEN RF1/RF2 TO RF COM Vs. FREQUENCY

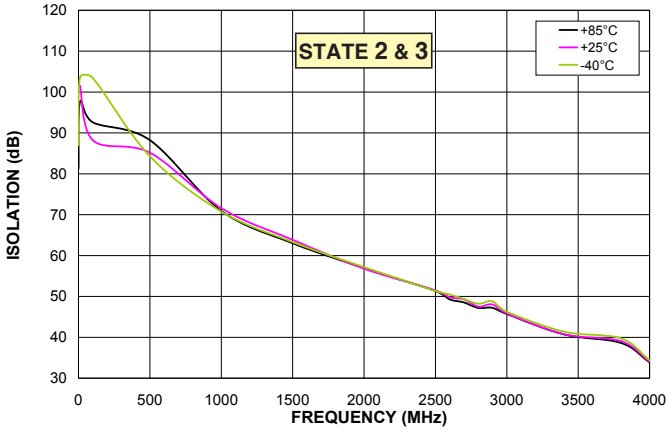

ISOLATION BETWEEN RF1/RF2 TO RF COM Vs. FREQUENCY

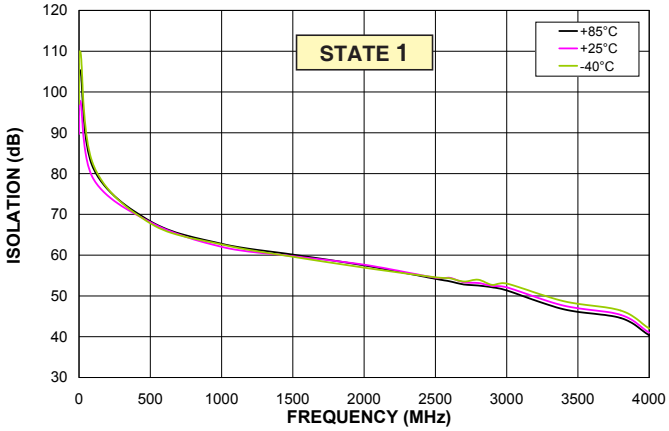

ISOLATION BETWEEN RF1 TO RF2 Vs. FREQUENCY

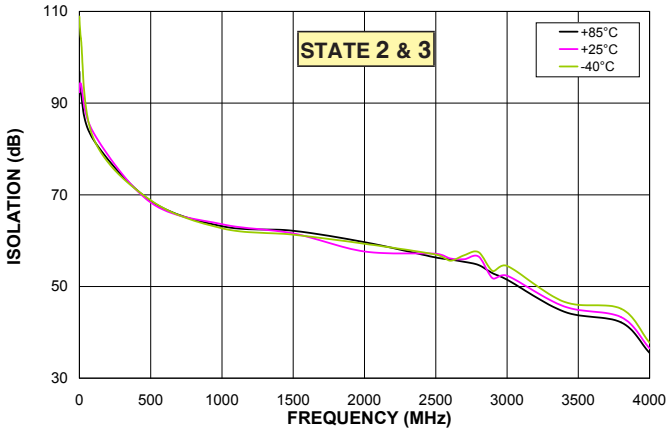

ISOLATION BETWEEN RF1 TO RF2 Vs. FREQUENCY

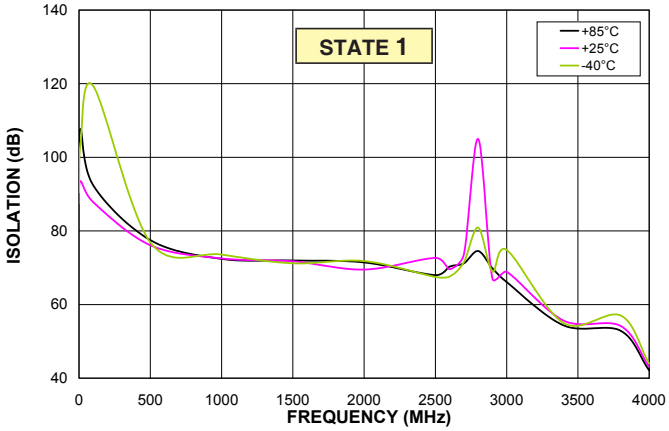

Notes
A. Performance and quality attributes and conditions not expressly stated in this specification document are intended to be excluded and do not form a part of this specification document.
B. Electrical specifications and performance data contained in this specification document are based on Mini-Circuit's applicable established test performance criteria and measurement instructions.
C. The parts covered by this specification document are subject to Mini-Circuits standard limited warranty and terms and conditions (collectively, "Standard Terms"); Purchasers of this part are entitled to the rights and benefits contained therein. For a full statement of the Standard Terms and the exclusive rights and remedies thereunder, please visit Mini-Circuits' website at www.minicircuits.com/MCLStore/terms.jsp

Typical Performance Curves over various states. For switch state see Truth Table 1 on page 3.

RF RETURN LOSS Vs. FREQUENCY @ +25°C

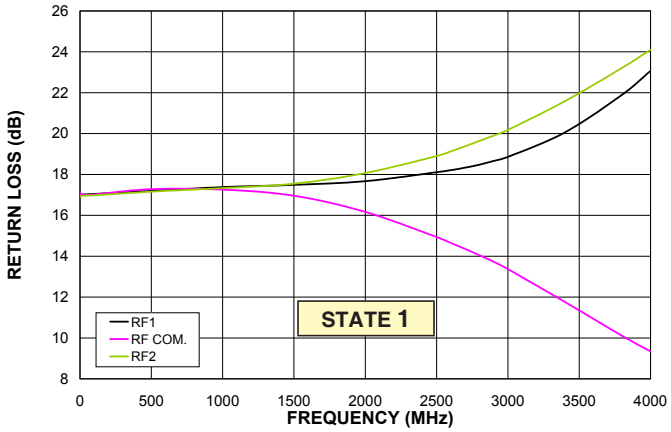

RF COM RETURN LOSS Vs. FREQUENCY @ +25°C

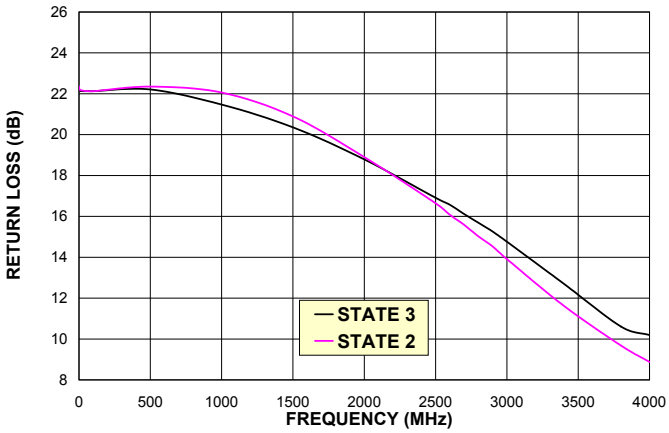

RF1 RETURN LOSS Vs. FREQUENCY

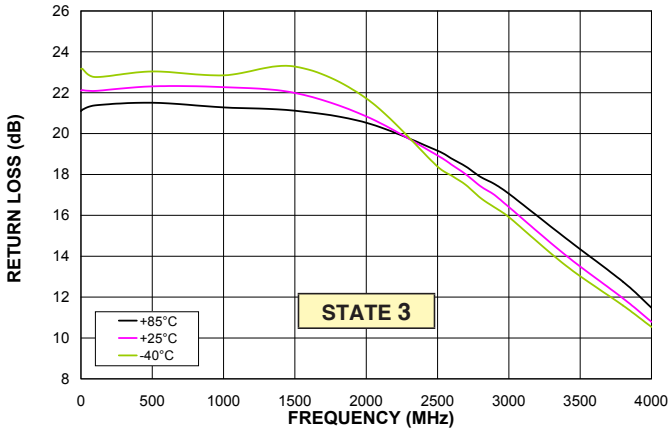

RF COM RETURN LOSS Vs. FREQUENCY

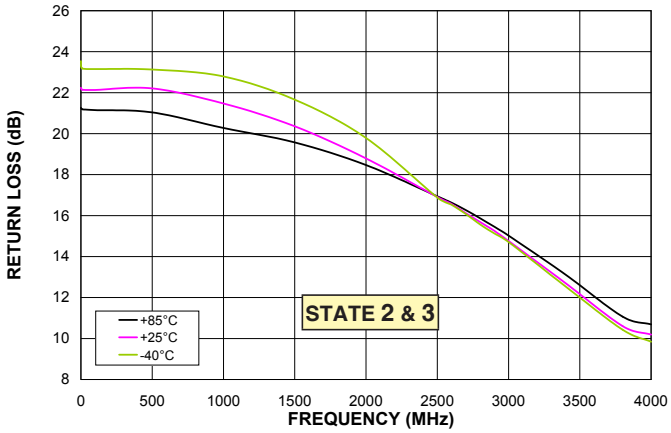

RF1 RETURN LOSS Vs. FREQUENCY

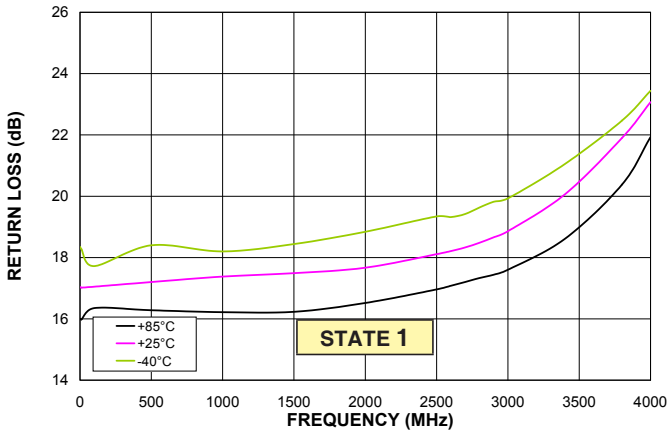

RF COM RETURN LOSS Vs. FREQUENCY

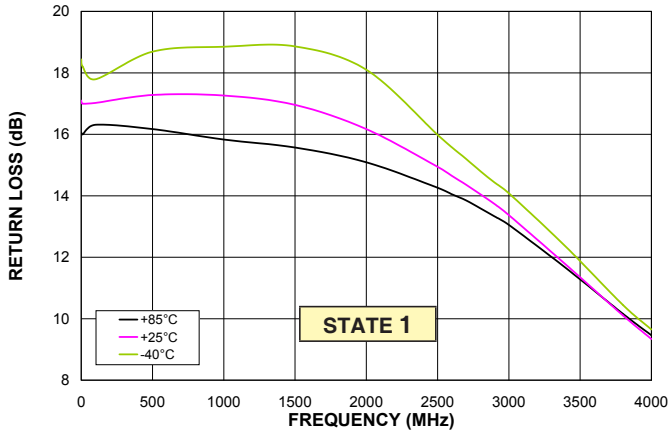

Notes
A. Performance and quality attributes and conditions not expressly stated in this specification document are intended to be excluded and do not form a part of this specification document.
B. Electrical specifications and performance data contained in this specification document are based on Mini-Circuit's applicable established test performance criteria and measurement instructions.
C. The parts covered by this specification document are subject to Mini-Circuits standard limited warranty and terms and conditions (collectively, "Standard Terms"); Purchasers of this part are entitled to the rights and benefits contained therein. For a full statement of the Standard Terms and the exclusive rights and remedies thereunder, please visit Mini-Circuits' website at www.minicircuits.com/MCLStore/terms.jsp

Typical Performance Curves over various states. For switch state see Truth Table 1 on page 3.

RF2 RETURN LOSS Vs. FREQUENCY

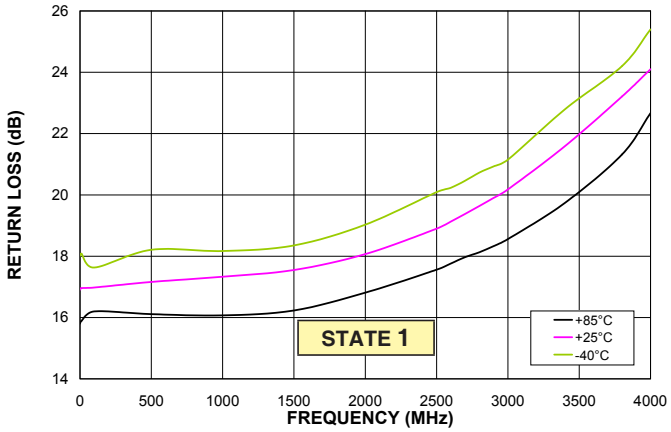

RF2 RETURN LOSS Vs. FREQUENCY

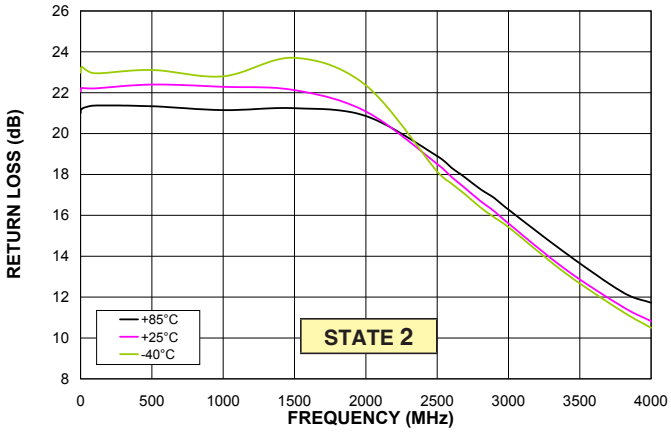

INPUT IP3 Vs. FREQUENCY

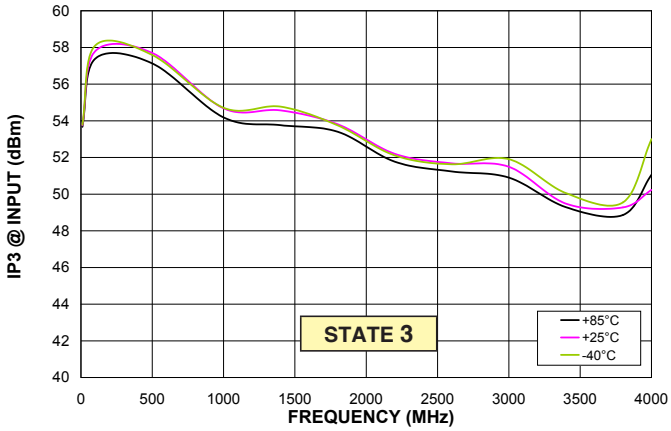

INPUT IP3 Vs. FREQUENCY

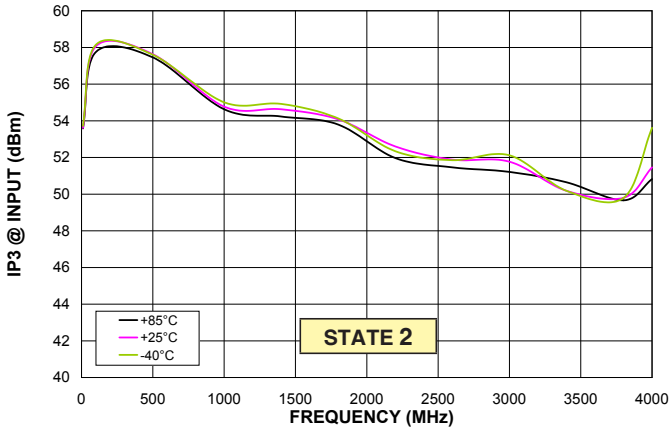

POWER IN @ 1dB COMPRESSION Vs. FREQUENCY

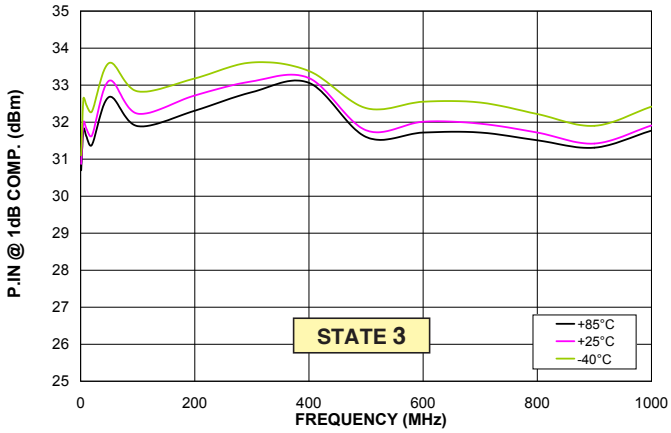

POWER IN @ 1dB COMPRESSION Vs. FREQUENCY

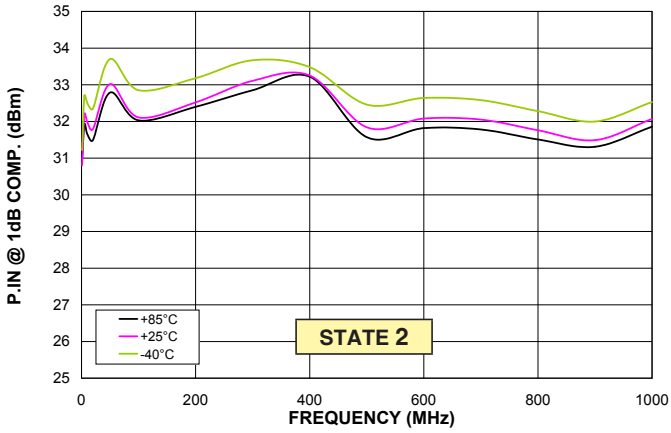

Notes
A. Performance and quality attributes and conditions not expressly stated in this specification document are intended to be excluded and do not form a part of this specification document.
B. Electrical specifications and performance data contained in this specification document are based on Mini-Circuit's applicable established test performance criteria and measurement instructions.
C. The parts covered by this specification document are subject to Mini-Circuits standard limited warranty and terms and conditions (collectively, "Standard Terms"); Purchasers of this part are entitled to the rights and benefits contained therein. For a full statement of the Standard Terms and the exclusive rights and remedies thereunder, please visit Mini-Circuits' website at www.minicircuits.com/MCLStore/terms.jsp

Outline Drawing (DG983-1)

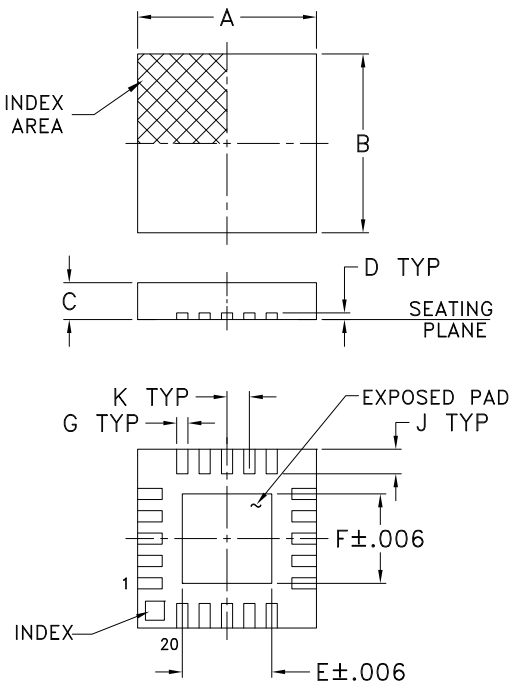

PCB Land Pattern

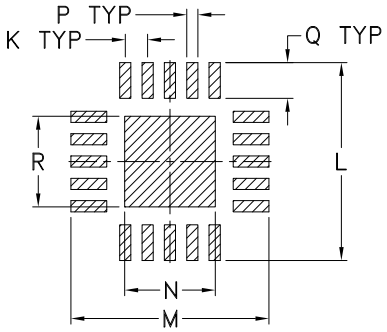

Suggested Layout,
Tolerance to be within ±.002

Device Marking

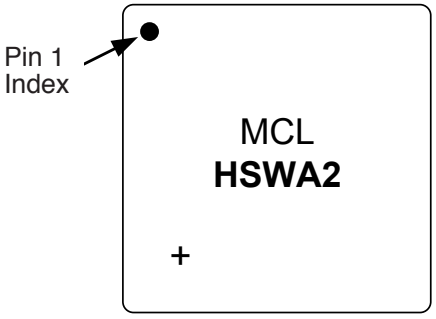

Outline Dimensions (inch/mm)

A	B	C	D	E	F	G	H	J	K	L	M	N	P	Q	R	WT. GRAMS
.157	**.157**	**.035**	**.008**	**.081**	**.081**	**.010**	**—**	**.022**	**.020**	**.177**	**.177**	**.081**	**.010**	**.032**	**.081**	.04
4.00	4.00	0.90	0.20	2.06	2.06	0.25	—	0.56	0.50	4.50	4.50	2.06	0.25	0.81	2.06	

Notes
A. Performance and quality attributes and conditions not expressly stated in this specification document are intended to be excluded and do not form a part of this specification document.
B. Electrical specifications and performance data contained in this specification document are based on Mini-Circuit's applicable established test performance criteria and measurement instructions.
C. The parts covered by this specification document are subject to Mini-Circuits standard limited warranty and terms and conditions (collectively, "Standard Terms"); Purchasers of this part are entitled to the rights and benefits contained therein. For a full statement of the Standard Terms and the exclusive rights and remedies thereunder, please visit Mini-Circuits' website at www.minicircuits.com/MCLStore/terms.jsp

Suggested Layout for PCB Design (PL-206)

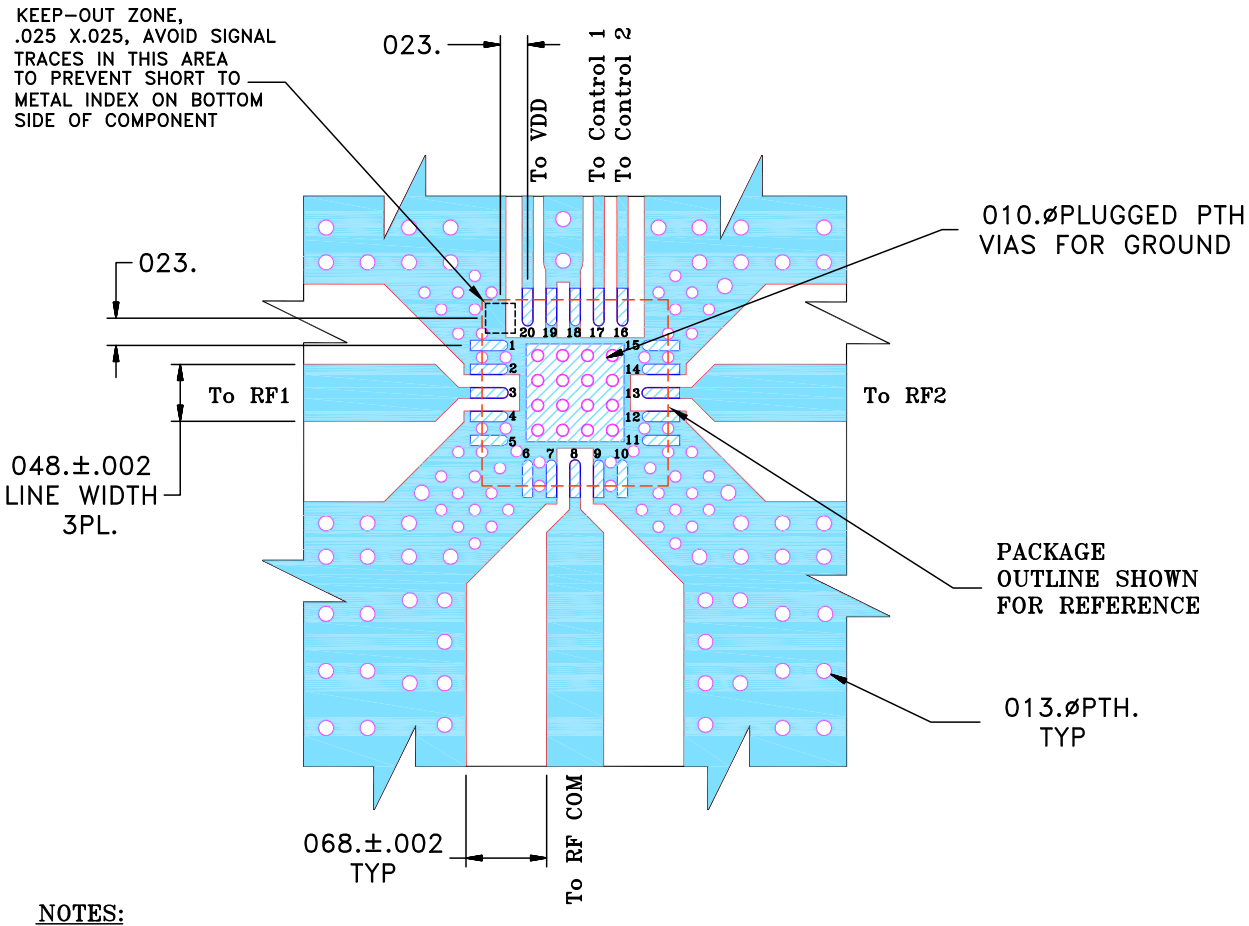

NOTES:

1. TRACE WIDTH IS SHOWN FOR FR4 WITH DIELECTRIC THICKNESS. .025"±.002". COPPER: 1/2 OZ. EACH SIDE. FOR OTHER MATERIALS TRACE WIDTH MAY NEED TO BE MODIFIED.
2. BOTTOM SIDE OF THE PCB IS CONTINUOUS GROUND PLANE.

DENOTES PCB COPPER LAYOUT WITH SMOBC (SOLDER MASK OVER BARE COPPER)

DENOTES COPPER LAND PATTERN FREE OF SOLDERMASK

Recommended layout for PCB design

The amount of vias surrounding the device in the suggested PCB layout are critical for obtaining the specified isolation performance for the device shown in the datasheet.

Notes
A. Performance and quality attributes and conditions not expressly stated in this specification document are intended to be excluded and do not form a part of this specification document.
B. Electrical specifications and performance data contained in this specification document are based on Mini-Circuit's applicable established test performance criteria and measurement instructions.
C. The parts covered by this specification document are subject to Mini-Circuits standard limited warranty and terms and conditions (collectively, "Standard Terms"); Purchasers of this part are entitled to the rights and benefits contained therein. For a full statement of the Standard Terms and the exclusive rights and remedies thereunder, please visit Mini-Circuits' website at www.minicircuits.com/MCLStore/terms.jsp

TB-347 Evaluation Board Schematic Diagram

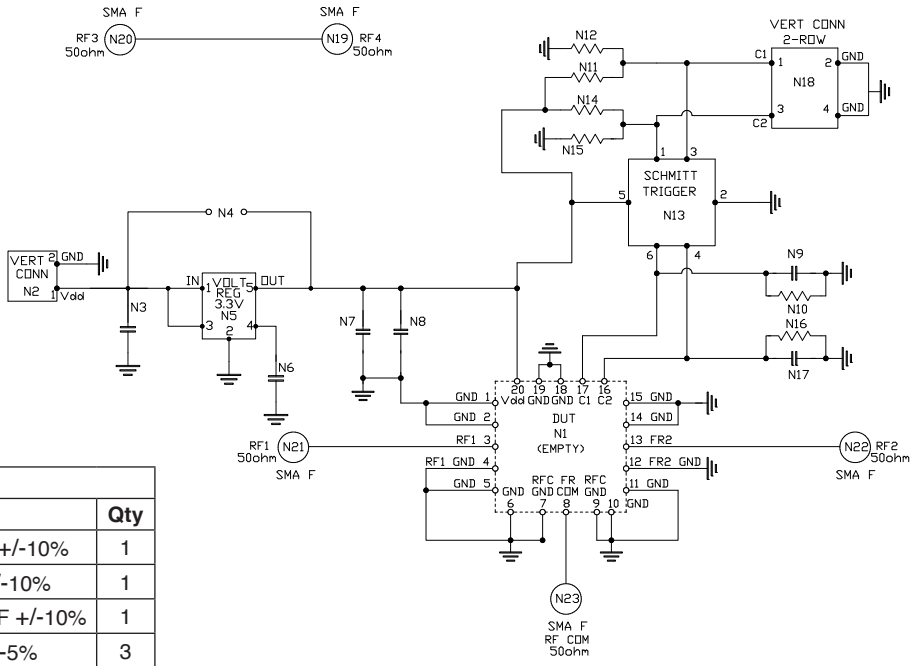

Bill of Materials		
N#	**DESCRIPTION**	**Qty**
N3	Capacitor Tantalum 1206 1μF +/-10%	1
N6	Capacitor X7R 0402 0.01μF +/-10%	1
N7	Capacitor Tantalum 1206 3.3μF +/-10%	1
N8, N9, N17	Capacitor 0603 NPO 100pF +/-5%	3
N11, N14	Resistor 0603 1 MOHM +/-1%	2
N12, N15	Resistor 0603 10 MOHM +/-1%	2
N10, N16	Resistor 0603 10 KOHM +/-1%	2
N5	LDO Voltage Regulator 3.3V MAX8878	1
N13	Dual Non-inverted Schmitt Trigger SN74LVC2G17	1
N1	Empty (location for HSWA2-30DR+)	1
N4	Empty	1

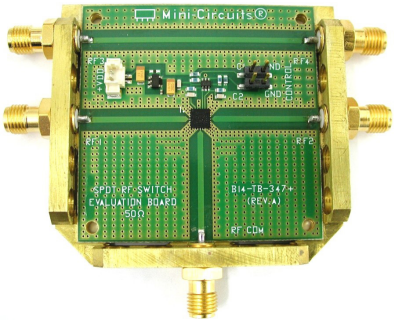

TB-347

How to use evaluation Board TB-347

The Evaluation board TB-347 was designed to evaluate the electrical performance of the HSWA2-30DR+ SPDT switch.

RF3 and RF4 SMA 50Ω connectors are connected through a 50Ω transmission line that is used to estimate the evaluation board loss for de-embedding purposes. The transmission lines were designed using a coplanar wave-guide with ground plane. For details, please see suggested PCB layout on Page 8. The number of vias surrounding the switch is critical for obtaining the specified isolation.

The TB-347 operates from +2.7V to +6.5V applied to VDD connector. IC1 voltage regulator limits the supply voltage to the switch to +3.3V. IC2 is a Schmitt trigger & buffer which prevents an overload of switch control inputs from high level control signals (up to +5.5V) and prevents from noise and transient spikes during switching process.

The control connector is used for computer control mode or manual operation mode. In manual control mode connect Control 1 and/or Control 2 to ground to set Control 1 and/or Control 2 to logic low, respectively. When jumpers are removed, the digital control input pulled up to VDD for logic high.
For computer control mode the software & cable are supplied. The cable should be connected between computer LPT port and evaluation board control connector.

Notes
A. Performance and quality attributes and conditions not expressly stated in this specification document are intended to be excluded and do not form a part of this specification document.
B. Electrical specifications and performance data contained in this specification document are based on Mini-Circuit's applicable established test performance criteria and measurement instructions.
C. The parts covered by this specification document are subject to Mini-Circuits standard limited warranty and terms and conditions (collectively, "Standard Terms"); Purchasers of this part are entitled to the rights and benefits contained therein. For a full statement of the Standard Terms and the exclusive rights and remedies thereunder, please visit Mini-Circuits' website at www.minicircuits.com/MCLStore/terms.jsp

Tape and Reel Packaging Information

Table T&R

TR No.	No. of Devices	Reel Size	Tape Width	Pitch	Unit Orientation
F87	Small quantity standards 20, 50, 100, 200	7 inch	12 mm	8 mm	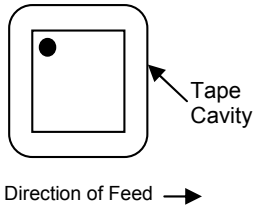
	3000 (Standard)	13 inch			

Notes
A. Performance and quality attributes and conditions not expressly stated in this specification document are intended to be excluded and do not form a part of this specification document.
B. Electrical specifications and performance data contained in this specification document are based on Mini-Circuit's applicable established test performance criteria and measurement instructions.
C. The parts covered by this specification document are subject to Mini-Circuits standard limited warranty and terms and conditions (collectively, "Standard Terms"); Purchasers of this part are entitled to the rights and benefits contained therein. For a full statement of the Standard Terms and the exclusive rights and remedies thereunder, please visit Mini-Circuits' website at www.minicircuits.com/MCLStore/terms.jsp

Typical Performance Data

FREQ (MHz)	INSERTION LOSS @ Vdd=+3V OVER TEMPERATURE					
	RF COM-RF1 (dB) *STATE 3**			RF COM-RF2 (dB) *STATE 2**		
	-40°C	+25°C	+85°C	-40°C	+25°C	+85°C
0.03	0.60	0.68	0.81	0.69	0.75	0.88
0.10	0.62	0.70	0.81	0.64	0.71	0.82
1.00	0.63	0.71	0.81	0.63	0.70	0.80
10.00	0.64	0.71	0.80	0.62	0.70	0.79
50.00	0.66	0.73	0.82	0.64	0.72	0.82
100.00	0.66	0.73	0.80	0.64	0.72	0.80
200.00	0.66	0.75	0.81	0.66	0.74	0.79
300.00	0.65	0.76	0.83	0.64	0.74	0.82
400.00	0.69	0.79	0.88	0.69	0.79	0.86
500.00	0.69	0.81	0.88	0.69	0.78	0.87
600.00	0.69	0.79	0.89	0.67	0.78	0.88
700.00	0.68	0.79	0.89	0.67	0.77	0.87
800.00	0.68	0.79	0.90	0.67	0.78	0.88
900.00	0.67	0.79	0.89	0.65	0.78	0.87
1000.00	0.67	0.78	0.89	0.65	0.76	0.87
1100.00	0.65	0.78	0.90	0.65	0.76	0.88
1200.00	0.66	0.79	0.91	0.66	0.78	0.90
1300.00	0.65	0.80	0.92	0.65	0.78	0.90
1400.00	0.67	0.81	0.91	0.66	0.79	0.91
1500.00	0.67	0.81	0.91	0.66	0.80	0.90
1600.00	0.7	0.84	0.94	0.69	0.82	0.92
1700.00	0.72	0.86	0.95	0.69	0.84	0.94
1800.00	0.73	0.87	0.97	0.71	0.85	0.95
1900.00	0.74	0.88	0.97	0.71	0.85	0.95
2000.00	0.77	0.91	1.01	0.75	0.90	0.98
2100.00	0.79	0.94	1.02	0.77	0.91	1.01
2200.00	0.81	0.96	1.05	0.80	0.95	1.03
2300.00	0.85	0.98	1.07	0.84	0.98	1.07
2400.00	0.85	0.97	1.06	0.85	0.99	1.07
2500.00	0.81	0.94	1.03	0.81	0.93	1.03
2600.00	0.83	0.95	1.04	0.82	0.95	1.04
2700.00	0.81	0.95	1.04	0.81	0.95	1.04
2800.00	0.84	0.98	1.08	0.85	0.98	1.07
2900.00	0.84	0.97	1.06	0.84	0.97	1.08
3000.00	0.89	1.02	1.12	0.90	1.04	1.15

FREQ (MHz)	ISOLATION @ Vdd=+3V OVER TEMPERATURE														
	RF COM-RF1 (dB) *STATE 2**			RF COM-RF2 (dB) *STATE 3**			RF1-RF2 (dB) *STATE 3**			RF1-RF2 (dB) *STATE 2**			RF1-RF2 (dB) *STATE 1**		
	-40°C	+25°C	+85°C	-40°C	+25°C	+85°C	-40°C	+25°C	+85°C	-40°C	+25°C	+85°C	-40°C	+25°C	+85°C
0.03	86.96	101.14	81.22	83.71	83.39	99.47	108.91	92.36	96.89	81.51	80.78	85.41	90.43	87.46	94.14
0.10	93.01	91.42	90.61	102.61	95.95	90.16	101.12	90.88	102.87	87.24	94.27	92.95	93.43	90.56	88.32
1.00	105.35	91.72	98.17	102.82	98.35	105.71	97.14	102.22	99.27	96.14	94.95	95.35	95.72	101.92	110.17
10.00	103.50	101.51	97.57	101.09	98.64	101.96	104.13	94.21	92.11	95.59	94.83	94.34	103.69	93.52	107.63
50.00	92.50	96.44	98.14	92.77	100.44	92.30	85.28	84.75	89.07	87.76	85.68	93.73	94.45	100.02	97.80
100.00	103.43	88.22	92.60	89.11	97.07	91.83	82.23	83.50	81.96	79.77	82.75	81.00	119.37	87.83	92.40
200.00	87.07	92.18	110.11	89.98	98.20	88.52	76.42	74.34	75.57	76.75	74.33	76.94	87.15	87.59	85.54
300.00	91.28	88.75	92.66	83.44	89.64	87.20	72.17	71.75	72.41	72.64	72.83	73.94	81.00	81.95	80.82
400.00	90.91	90.12	91.87	81.76	80.32	87.81	70.09	69.68	70.69	70.65	70.29	70.22	82.71	79.02	80.47
500.00	84.29	85.17	88.24	79.04	79.49	79.99	68.79	68.33	68.68	68.26	67.91	68.75	76.92	76.11	77.51
600.00	79.88	81.13	80.84	79.11	76.79	76.55	67.42	66.78	67.82	66.64	67.80	67.46	80.21	76.22	77.97
700.00	77.18	78.93	79.38	73.92	74.36	73.26	65.65	66.19	65.83	64.96	65.94	65.71	75.38	75.49	75.15
800.00	75.19	76.35	77.94	70.85	70.73	71.24	65.18	65.63	65.47	65.04	65.71	64.99	75.06	76.01	74.80
900.00	72.35	73.60	74.05	68.80	68.57	68.82	63.81	64.40	64.31	63.85	64.25	64.19	73.10	72.43	72.80
1000.00	70.76	71.58	70.92	67.99	66.78	67.74	62.70	63.58	63.15	63.79	64.08	63.89	73.57	72.54	72.41
1100.00	68.34	70.20	70.36	64.72	65.24	64.97	62.78	62.77	62.96	62.50	62.66	63.04	71.67	71.46	73.39
1200.00	67.34	67.54	67.30	63.83	63.09	63.58	61.74	62.28	62.63	61.87	62.79	62.89	71.83	71.04	73.62
1300.00	66.04	66.53	66.59	61.90	61.71	61.21	61.50	62.06	62.51	62.12	61.93	62.60	72.68	70.84	71.69
1400.00	65.72	65.42	65.44	60.73	60.65	60.72	61.40	61.78	61.82	61.90	62.02	61.98	70.66	72.25	72.34
1500.00	63.30	63.86	63.01	59.24	59.03	59.59	61.31	61.59	62.14	61.80	61.62	61.87	71.20	71.77	71.98
1600.00	60.67	60.36	60.42	58.25	58.25	58.27	60.89	61.10	61.63	61.40	61.44	61.94	71.74	73.31	73.00
1700.00	60.15	60.01	59.91	56.82	57.16	56.98	59.64	60.09	60.88	59.63	59.90	60.32	70.69	70.95	69.86
1800.00	59.78	59.48	59.28	55.71	56.17	55.64	59.69	60.52	60.66	59.65	59.75	60.16	70.97	70.92	70.96
1900.00	58.16	57.65	57.02	54.73	54.64	54.56	60.39	60.40	60.25	61.04	61.01	60.37	70.82	69.83	70.25
2000.00	57.17	56.78	56.95	53.21	52.82	54.15	59.32	57.63	59.68	59.39	59.13	60.49	71.82	69.49	71.45
2100.00	54.44	53.75	53.64	52.70	52.13	52.20	61.07	59.98	60.14	62.08	60.66	59.61	79.05	76.39	74.50
2200.00	53.69	52.85	52.56	54.46	54.43	53.22	56.85	56.72	56.70	55.77	55.17	56.24	66.88	66.28	65.69
2300.00	49.62	48.91	48.94	52.00	53.91	57.00	52.30	53.43	53.11	53.42	53.17	53.57	61.27	61.82	61.63
2400.00	47.62	48.25	49.12	55.80	56.38	59.42	53.37	54.23	55.40	53.03	53.18	54.29	63.23	63.56	64.60
2500.00	51.33	51.50	51.35	53.70	52.35	52.98	56.96	57.15	56.32	52.10	55.06	55.38	67.48	72.66	67.99
2600.00	50.47	49.82	49.29	49.90	49.44	49.07	55.63	56.12	55.89	55.62	54.91	55.75	67.61	69.59	70.31
2700.00	49.38	49.27	48.53	48.68	48.03	47.92	56.81	55.95	55.38	56.39	56.08	55.27	71.50	73.65	71.21
2800.00	48.23	47.52	47.19	47.35	46.71	46.32	57.48	56.55	54.68	57.51	55.67	54.95	80.91	104.96	74.54
2900.00	48.82	48.06	47.22	45.60	45.81	45.84	53.36	51.79	52.86	53.98	52.23	53.14	68.95	67.10	69.88
3000.00	46.26	45.83	45.70	45.22	44.57	44.38	54.48	52.34	51.48	54.26	52.00	51.25	74.83	68.87	66.11

Note:

STATE	CONTROL INPUT		RF Com to RF1	RF Com to RF2
	Control 1	Control 2		
1	Low	Low	OFF	OFF
2	Low	High	OFF	ON
3	High	Low	ON	OFF

Typical Performance Data

FREQ (MHz)	VSWR @ Vdd=+3V OVER TEMPERATURE																										
	RF COM (:1) *STATE 3**			RF COM (:1) *STATE 2**			RF1 (:1) *STATE 3**			RF1 (:1) *STATE 2**			RF2 (:1) *STATE 3**			RF2 (:1) *STATE 2**			RF COM (:1) *STATE 1**			RF1 (:1) *STATE 1**			RF2 (:1) *STATE 1**		
	-40°C	+25°C	+85°C	-40°C	+25°C	+85°C	-40°C	+25°C	+85°C	-40°C	+25°C	+85°C	-40°C	+25°C	+85°C	-40°C	+25°C	+85°C	-40°C	+25°C	+85°C	-40°C	+25°C	+85°C	-40°C	+25°C	+85°C
0.03	1.14	1.17	1.19	1.14	1.16	1.19	1.15	1.17	1.19	1.28	1.33	1.38	1.29	1.33	1.39	1.15	1.17	1.20	1.27	1.32	1.37	1.28	1.33	1.38	1.29	1.33	1.39
0.10	1.14	1.17	1.19	1.14	1.17	1.19	1.15	1.17	1.19	1.28	1.33	1.38	1.29	1.33	1.38	1.15	1.17	1.19	1.28	1.33	1.37	1.28	1.33	1.38	1.29	1.33	1.39
1.00	1.15	1.17	1.19	1.15	1.17	1.19	1.15	1.17	1.19	1.28	1.33	1.38	1.29	1.33	1.38	1.15	1.17	1.19	1.28	1.33	1.38	1.28	1.33	1.38	1.28	1.33	1.38
10.00	1.15	1.17	1.19	1.15	1.17	1.19	1.15	1.17	1.19	1.28	1.33	1.38	1.29	1.33	1.38	1.15	1.17	1.19	1.28	1.33	1.38	1.28	1.33	1.38	1.29	1.33	1.38
50.00	1.15	1.17	1.19	1.15	1.17	1.19	1.15	1.17	1.19	1.29	1.33	1.37	1.29	1.33	1.38	1.15	1.17	1.19	1.29	1.33	1.37	1.28	1.33	1.37	1.29	1.33	1.38
100.00	1.15	1.17	1.19	1.16	1.17	1.18	1.16	1.17	1.19	1.30	1.33	1.36	1.30	1.33	1.37	1.15	1.17	1.19	1.30	1.33	1.36	1.30	1.33	1.36	1.30	1.33	1.37
200.00	1.16	1.17	1.19	1.17	1.17	1.17	1.15	1.17	1.18	1.30	1.33	1.35	1.31	1.33	1.35	1.16	1.17	1.18	1.30	1.33	1.35	1.30	1.33	1.35	1.31	1.33	1.35
300.00	1.16	1.17	1.19	1.15	1.17	1.18	1.15	1.17	1.19	1.28	1.32	1.36	1.29	1.33	1.36	1.15	1.17	1.19	1.28	1.32	1.36	1.28	1.33	1.36	1.29	1.33	1.36
400.00	1.15	1.17	1.19	1.14	1.17	1.19	1.16	1.17	1.19	1.28	1.32	1.37	1.28	1.33	1.37	1.15	1.16	1.19	1.26	1.32	1.37	1.28	1.32	1.37	1.28	1.32	1.37
500.00	1.15	1.17	1.19	1.14	1.17	1.19	1.15	1.17	1.18	1.27	1.32	1.36	1.28	1.32	1.37	1.15	1.16	1.19	1.26	1.32	1.37	1.27	1.32	1.36	1.28	1.32	1.37
600.00	1.15	1.17	1.20	1.14	1.16	1.19	1.15	1.17	1.18	1.27	1.32	1.36	1.27	1.32	1.36	1.15	1.16	1.19	1.26	1.32	1.37	1.27	1.32	1.36	1.27	1.32	1.37
700.00	1.15	1.17	1.20	1.14	1.17	1.19	1.15	1.17	1.19	1.27	1.32	1.36	1.28	1.32	1.36	1.15	1.16	1.19	1.26	1.32	1.37	1.27	1.32	1.36	1.27	1.32	1.36
800.00	1.16	1.18	1.21	1.15	1.17	1.20	1.15	1.16	1.19	1.27	1.32	1.36	1.28	1.32	1.37	1.15	1.16	1.19	1.26	1.32	1.38	1.27	1.32	1.36	1.28	1.32	1.37
900.00	1.16	1.18	1.21	1.15	1.17	1.20	1.15	1.17	1.19	1.27	1.31	1.37	1.28	1.32	1.37	1.15	1.17	1.19	1.26	1.32	1.38	1.27	1.31	1.37	1.28	1.32	1.37
1000.00	1.16	1.18	1.21	1.14	1.17	1.21	1.16	1.17	1.19	1.28	1.31	1.36	1.28	1.32	1.37	1.16	1.17	1.19	1.26	1.32	1.39	1.28	1.31	1.37	1.28	1.31	1.37
1100.00	1.17	1.19	1.22	1.15	1.17	1.21	1.15	1.17	1.19	1.28	1.31	1.37	1.28	1.31	1.37	1.15	1.17	1.19	1.26	1.32	1.39	1.28	1.31	1.37	1.28	1.31	1.37
1200.00	1.17	1.19	1.22	1.15	1.18	1.21	1.15	1.17	1.19	1.28	1.31	1.37	1.28	1.31	1.37	1.15	1.17	1.19	1.26	1.32	1.39	1.27	1.31	1.37	1.28	1.31	1.37
1300.00	1.17	1.20	1.23	1.15	1.18	1.22	1.15	1.17	1.19	1.28	1.31	1.37	1.28	1.31	1.37	1.15	1.17	1.19	1.26	1.32	1.40	1.28	1.31	1.37	1.28	1.31	1.37
1400.00	1.17	1.21	1.23	1.15	1.19	1.22	1.14	1.17	1.19	1.27	1.31	1.37	1.28	1.31	1.37	1.14	1.17	1.19	1.26	1.33	1.40	1.27	1.31	1.37	1.28	1.31	1.37
1500.00	1.18	1.21	1.23	1.16	1.20	1.22	1.15	1.17	1.19	1.27	1.31	1.36	1.28	1.31	1.36	1.14	1.17	1.19	1.26	1.33	1.40	1.27	1.31	1.37	1.28	1.31	1.37
1600.00	1.19	1.22	1.24	1.17	1.21	1.23	1.15	1.18	1.20	1.27	1.31	1.36	1.27	1.30	1.36	1.14	1.17	1.19	1.26	1.34	1.40	1.27	1.31	1.36	1.27	1.30	1.36
1700.00	1.20	1.23	1.25	1.18	1.22	1.24	1.15	1.18	1.20	1.27	1.31	1.36	1.27	1.30	1.35	1.14	1.18	1.19	1.27	1.34	1.41	1.27	1.31	1.36	1.27	1.30	1.36
1800.00	1.20	1.24	1.25	1.18	1.23	1.25	1.16	1.19	1.20	1.27	1.30	1.36	1.27	1.30	1.35	1.14	1.18	1.19	1.26	1.35	1.41	1.27	1.31	1.36	1.27	1.30	1.35
1900.00	1.21	1.25	1.26	1.19	1.24	1.26	1.16	1.19	1.20	1.27	1.30	1.35	1.26	1.29	1.34	1.15	1.19	1.20	1.27	1.36	1.42	1.27	1.30	1.35	1.26	1.29	1.34
2000.00	1.23	1.26	1.27	1.22	1.26	1.27	1.18	1.20	1.21	1.26	1.30	1.35	1.25	1.29	1.34	1.16	1.19	1.20	1.28	1.37	1.43	1.26	1.30	1.35	1.25	1.29	1.34
2100.00	1.25	1.27	1.28	1.24	1.27	1.28	1.19	1.21	1.22	1.26	1.30	1.35	1.24	1.28	1.33	1.18	1.20	1.20	1.30	1.38	1.44	1.26	1.30	1.35	1.24	1.28	1.33
2200.00	1.26	1.28	1.29	1.25	1.29	1.30	1.21	1.22	1.22	1.25	1.30	1.34	1.24	1.28	1.32	1.20	1.21	1.21	1.31	1.39	1.45	1.25	1.30	1.35	1.23	1.27	1.32
2300.00	1.28	1.29	1.29	1.29	1.31	1.32	1.24	1.24	1.24	1.25	1.29	1.34	1.23	1.27	1.32	1.23	1.22	1.21	1.33	1.41	1.46	1.25	1.29	1.34	1.23	1.27	1.32
2400.00	1.31	1.31	1.32	1.32	1.33	1.32	1.26	1.24	1.24	1.25	1.29	1.34	1.22	1.27	1.31	1.25	1.24	1.23	1.36	1.42	1.47	1.24	1.29	1.34	1.22	1.27	1.31
2500.00	1.33	1.33	1.33	1.34	1.35	1.34	1.27	1.26	1.25	1.25	1.28	1.33	1.22	1.26	1.30	1.28	1.27	1.26	1.38	1.44	1.48	1.24	1.28	1.33	1.22	1.26	1.31
2600.00	1.35	1.35	1.35	1.37	1.37	1.36	1.29	1.27	1.26	1.25	1.28	1.33	1.22	1.25	1.30	1.31	1.29	1.28	1.40	1.45	1.49	1.24	1.28	1.33	1.22	1.25	1.30
2700.00	1.37	1.37	1.36	1.40	1.40	1.39	1.31	1.29	1.27	1.24	1.28	1.32	1.21	1.24	1.29	1.33	1.32	1.29	1.42	1.47	1.51	1.24	1.28	1.32	1.21	1.24	1.29
2800.00	1.40	1.39	1.38	1.43	1.43	1.41	1.34	1.31	1.29	1.24	1.27	1.32	1.20	1.23	1.28	1.36	1.34	1.32	1.44	1.49	1.53	1.23	1.27	1.31	1.20	1.23	1.28
2900.00	1.42	1.42	1.41	1.46	1.46	1.44	1.36	1.33	1.31	1.23	1.26	1.31	1.20	1.23	1.27	1.38	1.37	1.34	1.47	1.52	1.55	1.23	1.26	1.31	1.20	1.23	1.28
3000.00	1.45	1.45	1.43	1.51	1.51	1.48	1.38	1.36	1.33	1.23	1.26	1.30	1.19	1.22	1.27	1.41	1.40	1.36	1.49	1.55	1.57	1.22	1.26	1.30	1.19	1.22	1.27

***Note:**

STATE	CONTROL INPUT		RF Com to RF1	RF Com to RF2
	Control 1	Control 2		
1	Low	Low	OFF	OFF
2	Low	High	OFF	ON
3	High	Low	ON	OFF

Typical Performance Data

FREQ (MHz)	INPUT IP3 @ Vdd=+3V OVER TEMPERATURE					
	RF COM-RF1 (dBm) *STATE 3**			RF COM-RF2 (dBm) *STATE 2**		
	-40°C	+25°C	+85°C	-40°C	+25°C	+85°C
10.00	53.78	53.75	53.67	53.72	53.61	53.58
20.00	57.08	56.98	57.15	57.09	57.09	56.94
50.00	65.36	63.62	62.16	65.48	64.30	63.36
100.00	58.10	57.79	57.38	58.14	58.05	57.74
200.00	63.99	62.37	60.65	64.45	62.91	61.42
300.00	63.70	65.38	64.59	63.29	64.80	64.86
400.00	58.78	59.20	58.73	58.65	58.83	58.98
500.00	57.59	57.70	57.13	57.60	57.63	57.46
600.00	55.92	55.92	55.08	55.93	55.87	55.48
700.00	57.60	57.56	57.79	57.52	57.55	57.15
800.00	59.23	59.88	60.00	59.37	59.56	61.69
900.00	56.35	56.56	56.06	56.38	56.35	56.42
1000.00	54.71	54.68	54.18	55.01	54.77	54.63
1200.00	53.68	53.53	53.06	54.01	53.75	53.38
1400.00	54.77	54.57	53.76	54.92	54.63	54.23
1600.00	55.32	55.36	54.61	55.48	55.73	55.29
1800.00	53.75	53.81	53.40	54.13	54.08	53.79
2000.00	52.61	52.56	52.21	52.84	52.88	52.63
2200.00	52.11	52.20	51.77	52.34	52.60	51.97
2400.00	51.79	51.21	50.81	52.84	53.30	52.15
2600.00	51.63	51.68	51.24	51.85	51.88	51.46
2800.00	51.61	51.51	50.94	51.95	51.81	51.34
3000.00	51.91	51.49	50.90	52.12	51.77	51.21

FREQ (MHz)	INPUT 1dB COMPRESSION @ Vdd=+3V OVER TEMPERATURE					
	RF COM-RF1 (dBm) *STATE 3**			RF COM-RF2 (dBm) *STATE 2**		
	-40°C	+25°C	+85°C	-40°C	+25°C	+85°C
1.00	31.10	30.87	30.70	31.22	30.81	30.94
5.00	32.64	32.00	31.81	32.70	32.20	31.91
10.00	32.47	31.83	31.62	32.51	31.99	31.66
20.00	32.29	31.64	31.39	32.35	31.79	31.49
50.00	33.60	33.12	32.68	33.70	33.02	32.79
100.00	32.83	32.23	31.89	32.85	32.11	32.03
200.00	33.18	32.72	32.31	33.18	32.52	32.40
300.00	33.61	33.10	32.81	33.67	33.11	32.85
400.00	33.38	33.19	33.06	33.48	33.25	33.22
500.00	32.38	31.78	31.60	32.46	31.84	31.57
600.00	32.55	32.01	31.72	32.64	32.08	31.82
700.00	32.53	31.96	31.72	32.58	32.05	31.78
800.00	32.22	31.72	31.51	32.28	31.76	31.51
900.00	31.90	31.42	31.31	32.00	31.49	31.31
1000.00	32.42	31.91	31.77	32.53	32.07	31.86

***Note:**

STATE	CONTROL INPUT		RF Com to RF1	RF Com to RF2
	Control 1	Control 2		
1	Low	Low	OFF	OFF
2	Low	High	OFF	ON
3	High	Low	ON	OFF

Typical Performance Curves

Insertion Loss @ Vdd=+3V over Temperature
RF COM-RF1 (State 3*) & RF COM RF2 (State 2*)

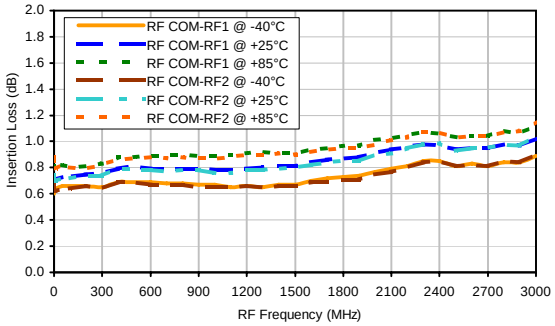

Isolation @ Vdd=+3V over Temperature
RF COM-RF1 (State 2*) & RF COM RF2 (State 3*)

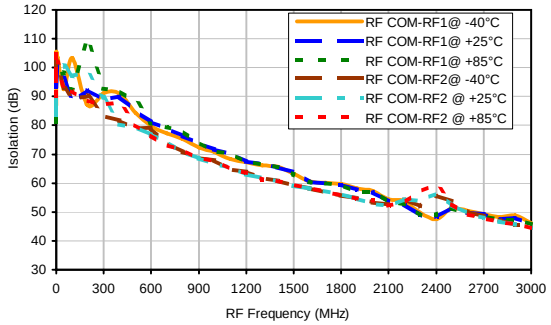

Isolation @ Vdd=+3V over Temperature
RF1-RF2 (State 1*)

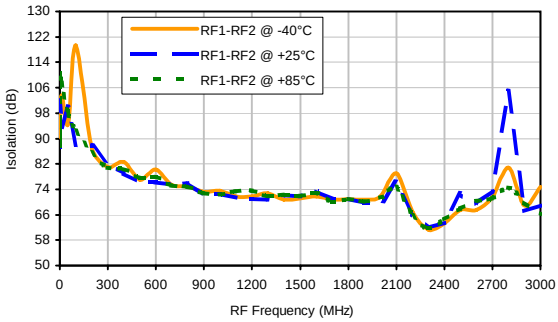

Isolation @ Vdd=+3V over Temperature
RF1-RF2 (State 2*)

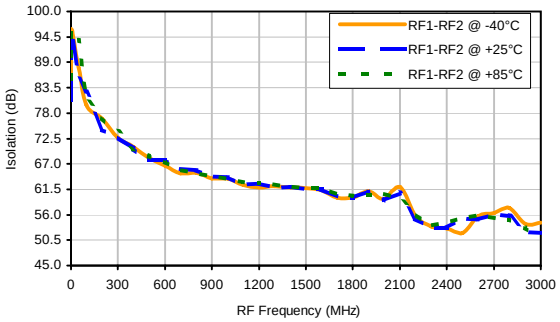

Isolation @ Vdd=+3V over Temperature
RF1-RF2 (State 3*)

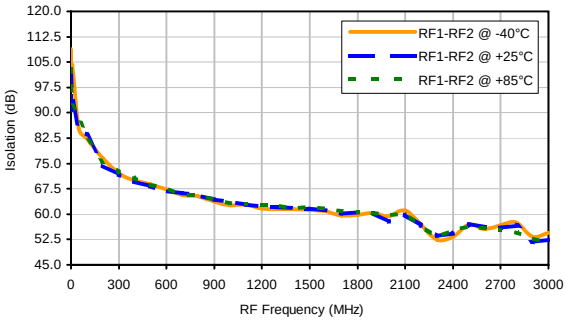

VSWR @ Vdd=+3V over Temperature
RF COM (State 1*)

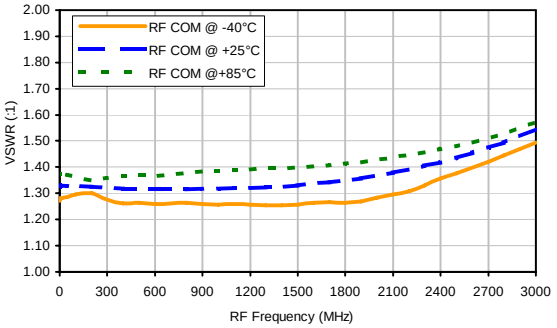

VSWR @ Vdd=+3V over Temperature
RF COM (State 2*)

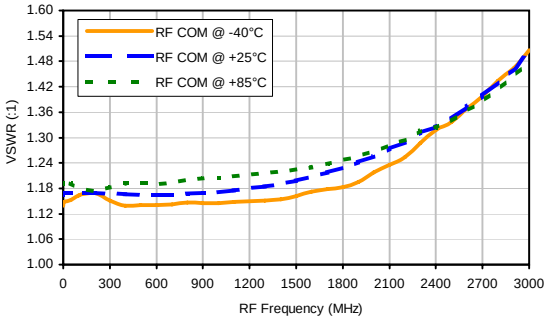

VSWR @ Vdd=+3V over Temperature
RF COM (State 3*)

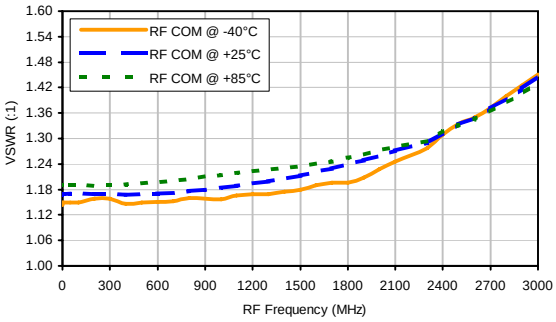

Note:

STATE	CONTROL INPUT		RF Com to RF1	RF Com to RF2
	Control 1	Control 2		
1	Low	Low	OFF	OFF
2	Low	High	OFF	ON
3	High	Low	ON	OFF

Typical Performance Curves

VSWR @ Vdd=+3V over Temperature
RF1 (State 1*)

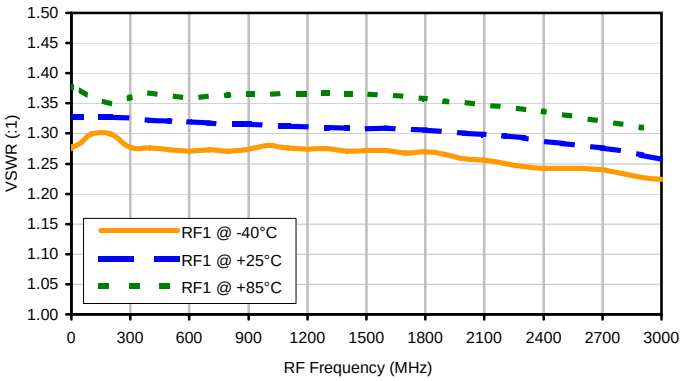

VSWR @ Vdd=+3V over Temperature
RF1 (State 2*)

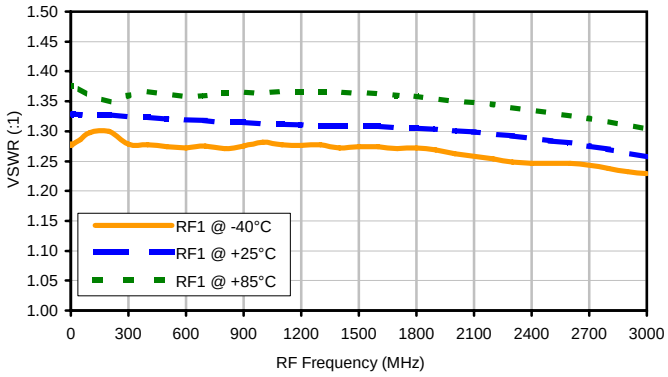

VSWR @ Vdd=+3V over Temperature
RF1 (State 3*)

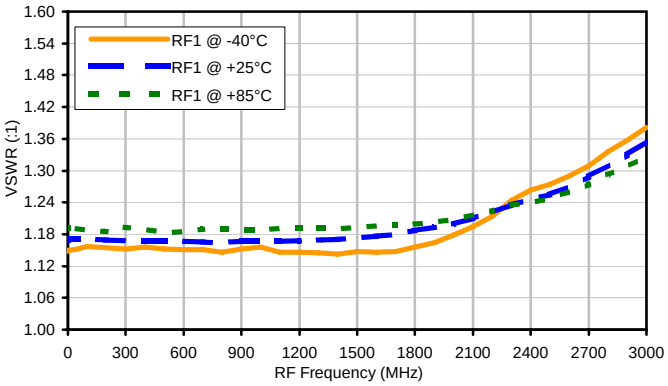

VSWR @ Vdd=+3V over Temperature
RF2 (State 1*)

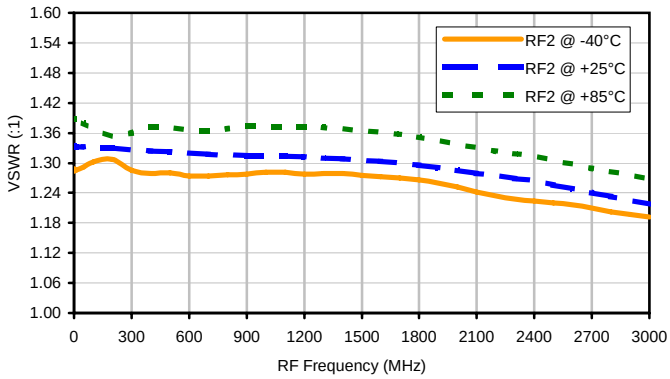

VSWR @ Vdd=+3V over Temperature
RF2 (State 2*)

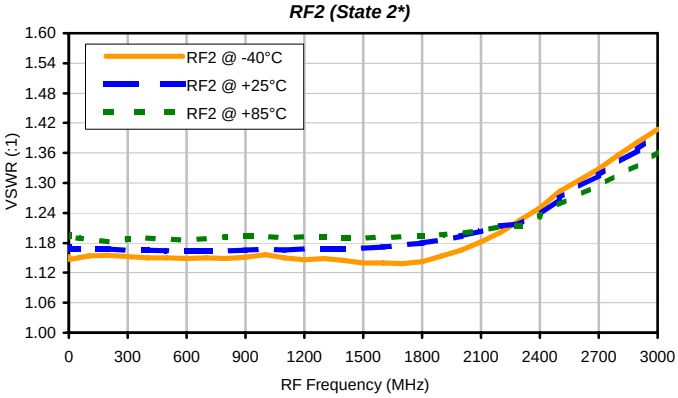

VSWR @ Vdd=+3V over Temperature
RF2 (State 3*)

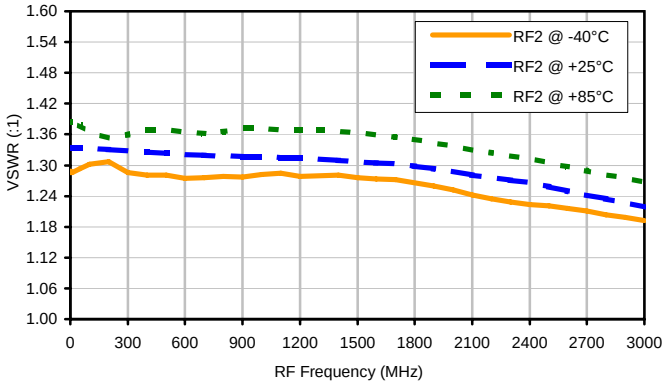

***Note:**

STATE	CONTROL INPUT		RF Com to RF1	RF Com to RF2
	Control 1	Control 2		
1	Low	Low	OFF	OFF
2	Low	High	OFF	ON
3	High	Low	ON	OFF

Typical Performance Curves

Input IP3 @ Vdd=+3V over Temperature
RF COM-RF1 (State 3*)

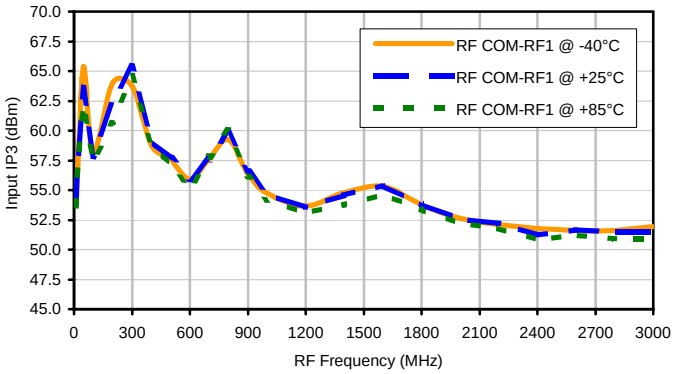

Input IP3 @ Vdd=+3V over Temperature
RF COM -RF2 (State 2*)

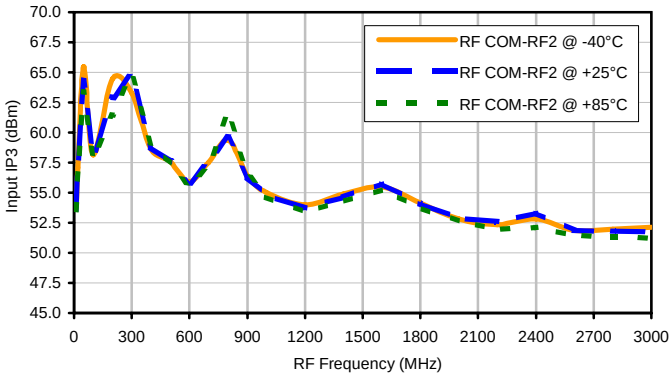

Input 1dB Compression @ Vdd=+3V over Temperature
RF COM-RF1 (State 3*)

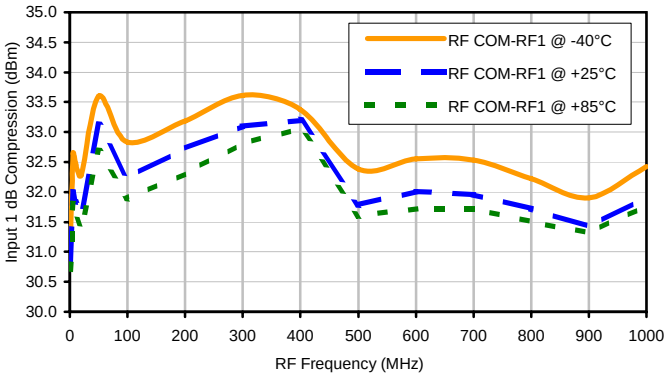

Input 1dB Compression @ Vdd=+3V over Temperature
RF COM-RF2 (State 2*)

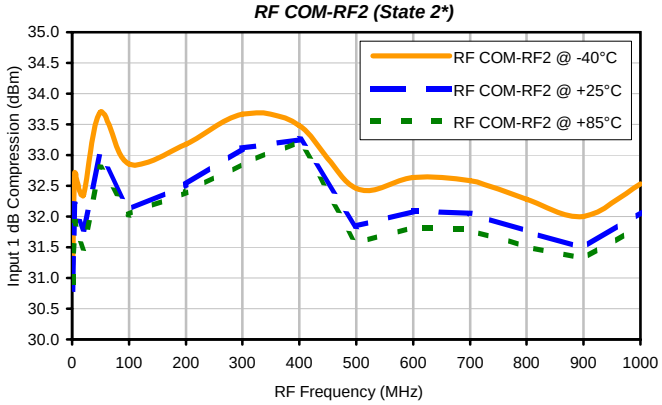

Note:

STATE	CONTROL INPUT		RF Com to RF1	RF Com to RF2
	Control 1	Control 2		
1	Low	Low	OFF	OFF
2	Low	High	OFF	ON
3	High	Low	ON	OFF

DG983-1

Outline Dimensions

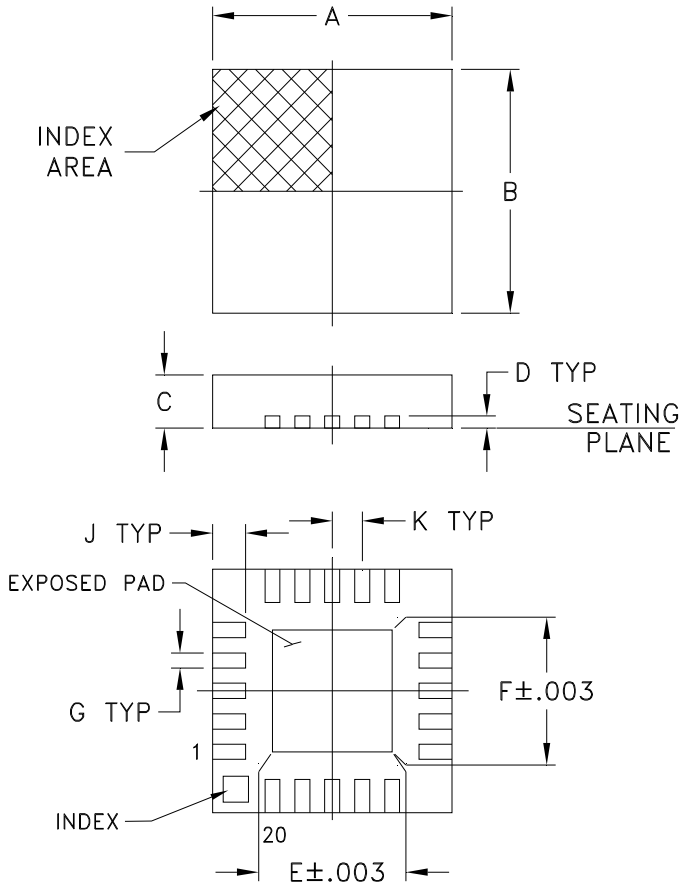

PCB Land Pattern

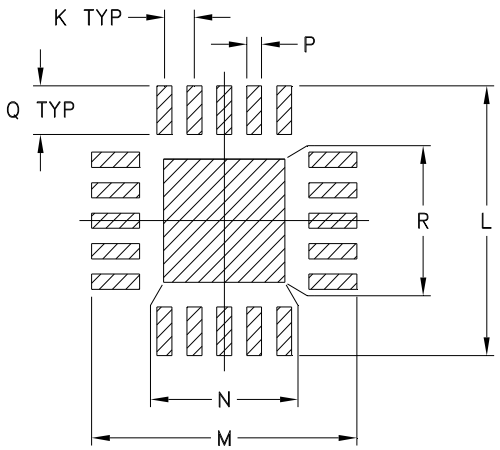

Suggested Layout,
Tolerance to be within ±.002

CASE #	A	B	C	D	E	F	G	H	J	K
DG983-1	.157 (4.00)	.157 (4.00)	.035 (0.90)	.008 (0.20)	.081 (2.06)	.081 (2.06)	.010 (0.25)	-- --	.022 (0.56)	.020 (0.50)

CASE #	L	M	N	P	Q	R	WT. GRAM
DG983-1	.177 (4.50)	.177 (4.50)	.081 (2.06)	.010 (0.25)	.032 (0.81)	.081 (2.06)	.04

Dimensions are in inches (mm). Tolerances: 2 Pl. ± .01; 3 Pl. ± .005

Notes:

1. Case material: Plastic.
2. Termination finish:
   For RoHS Case Styles: Tin plate. All models, (+) suffix.
   For RoHS-5 Case Styles: Tin-Lead plate. All models, no (+) suffix.

Tape & Reel Packaging TR-F87

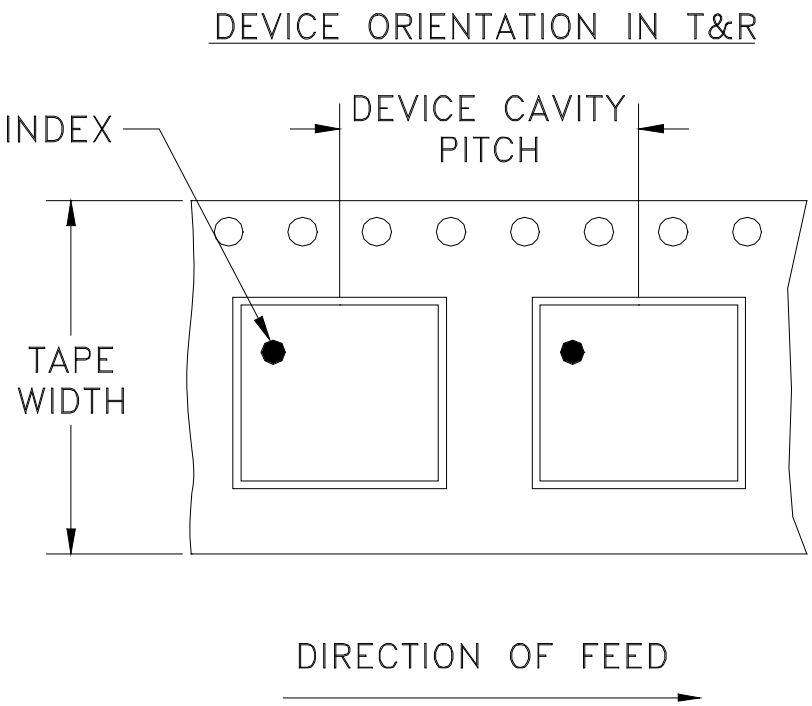

Tape Width, mm	Device Cavity Pitch, mm	Reel Size, inches	Devices per Reel	
12	8	7	Small quantity standards (see note)	20
				50
				100
				200
				500
				1000
		13	Standard	3000

Note : Please Consult individual model data sheet to determine device per reel availability

Mini-Circuits carrier tape materials provide protection from ESD (Electro-Static Discharge) during handling and transportation. Tapes are static dissipative and comply with industry standards EIA-481/EIA-541.

Go to: www.minicircuits.com/pages/pdfs/tape.pdf

Mini-Circuits®
INTERNET http://www.minicircuits.com
P.O. Box 350166, Brooklyn, New York 11235-0003 (718) 934-4500 Fax (718) 332-4661
Distribution Centers NORTH AMERICA 800-654-7949 • 417-335-5935 • Fax 417-335-5945 • EUROPE 44-1252-832600 • Fax 44-1252-837010
Mini-Circuits ISO 9001 & ISO 14001 Certified

This document and its contents are the property of Mini-Circuits.

THIRD ANGLE PROJECTION

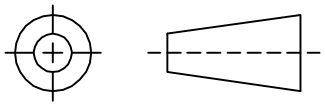

REVISIONS

REV	ECN No.	DESCRIPTION	DATE	DR	AUTH
B	M101674	UPDATE LAYOUT	11/05	DK	HH
C	M118768	UPDATE DIMENSION	07/08	HB	KN
D	M124175	PLUG VIAS UNDER UNIT	08/09	EM	HH
D	R77446	PLUG VIAS UNDER UNIT	08/09	EM	HH

SUGGESTED MOUNTING CONFIGURATION

FOR DG983-1 CASE STYLE, ra PIN CONNECTIONS, 50 Ω.

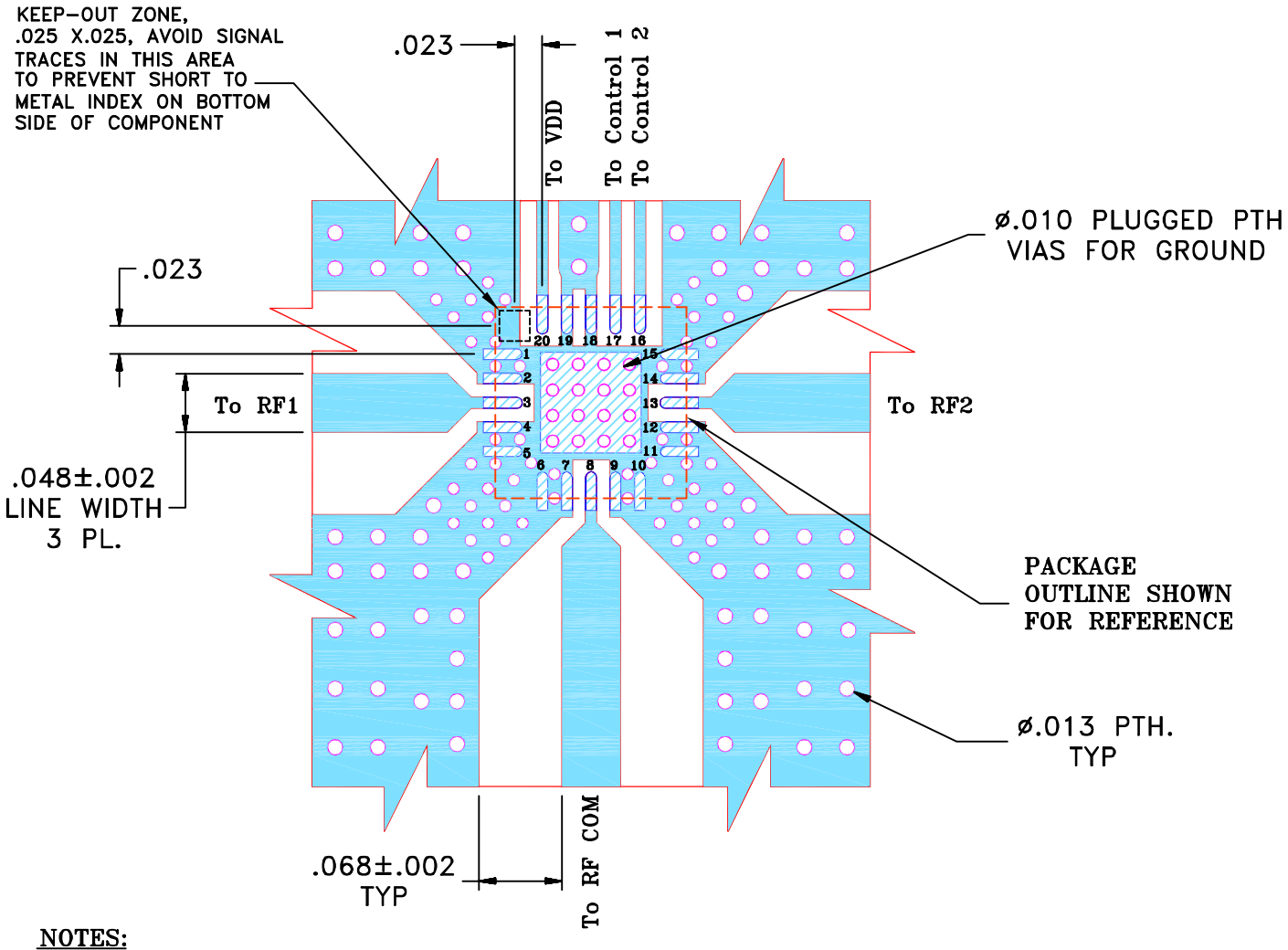

NOTES:

1. TRACE WIDTH IS SHOWN FOR FR4 WITH DIELECTRIC THICKNESS. .025"±.002". COPPER: 1/2 OZ. EACH SIDE. FOR OTHER MATERIALS TRACE WIDTH MAY NEED TO BE MODIFIED.
2. BOTTOM SIDE OF THE PCB IS CONTINUOUS GROUND PLANE.

DENOTES PCB COPPER LAYOUT WITH SMOBC (SOLDER MASK OVER BARE COPPER)

DENOTES COPPER LAND PATTERN FREE OF SOLDERMASK

UNLESS OTHERWISE SPECIFIED		INITIALS	DATE
DIMENSIONS ARE IN INCHES	DRAWN	HB	23.07.08
TOLERANCES ON:	CHECKED	YB	23.07.08
2 PL DECIMALS ±	APPROVED	KN	23.07.08
3 PL DECIMALS ± .005			
ANGLES ±			
FRACTIONS ±			

Mini-Circuits®

THIS DOCUMENT AND ITS CONTENTS ARE THE PROPERTY OF MINI-CIRCUITS. EXCEPT FOR USE EXPRESSLY GRANTED, IN WRITING, TO ITS VENDORS, VENDEE AND THE UNITED STATES GOVERNMENT, MINI-CIRCUITS RESERVES ALL PROPRIETARY DESIGN, USE , MANUFACTURING AND REPRODUCTION RIGHTS THERETO. THESE CONTENTS SHALL NOT BE USED, DUPLICATED OR DISCLOSED TO ANY OUTSIDE PARTY, IN WHOLE OR IN PART, WITHOUT WRITTEN PERMISSION OF MINI-CIRCUITS.

ASHEETA1.DWG REV:A DATE:01/12/95

Mini-Circuits® 13 Neptune Avenue Brooklyn NY 11235

PL, ra, DG983-1, HSWA
TB-347 (50 Ω)

SIZE	CODE IDENT	DRAWING NO:	REV:
A	15542	98-PL-206	D

FILE:	SCALE:	SHEET:
98PL206	7:1	1 OF 1

Evaluation Board and Circuit

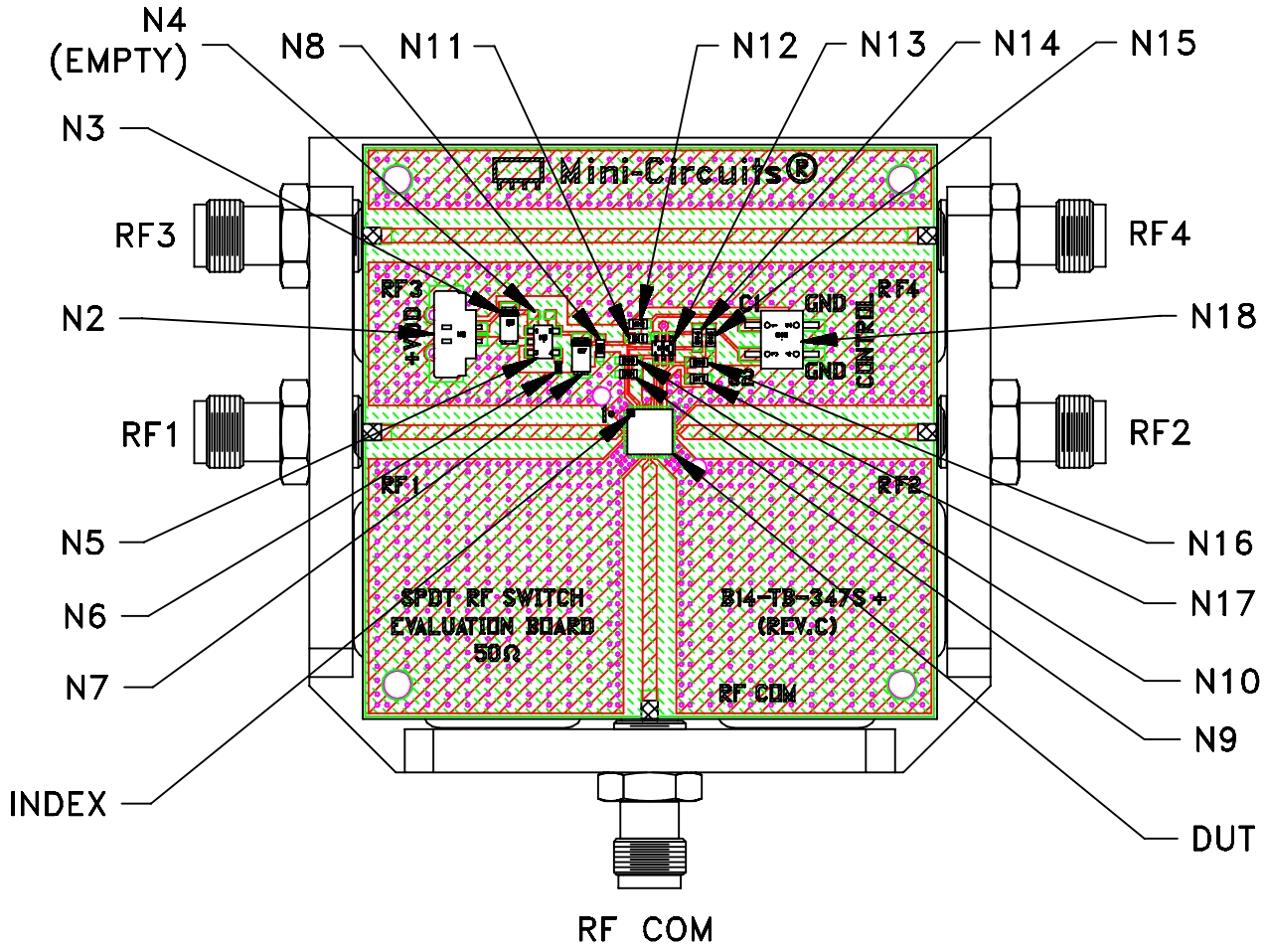

TB–347

Notes:

1. SMA Female connectors.
2. PCB Material: FR4 Grade IT 180TC (ITEQ Corporation) or equivalent, Dielectric Constant=4.5, Thickness=.025 inch.

Mini–Circuits®

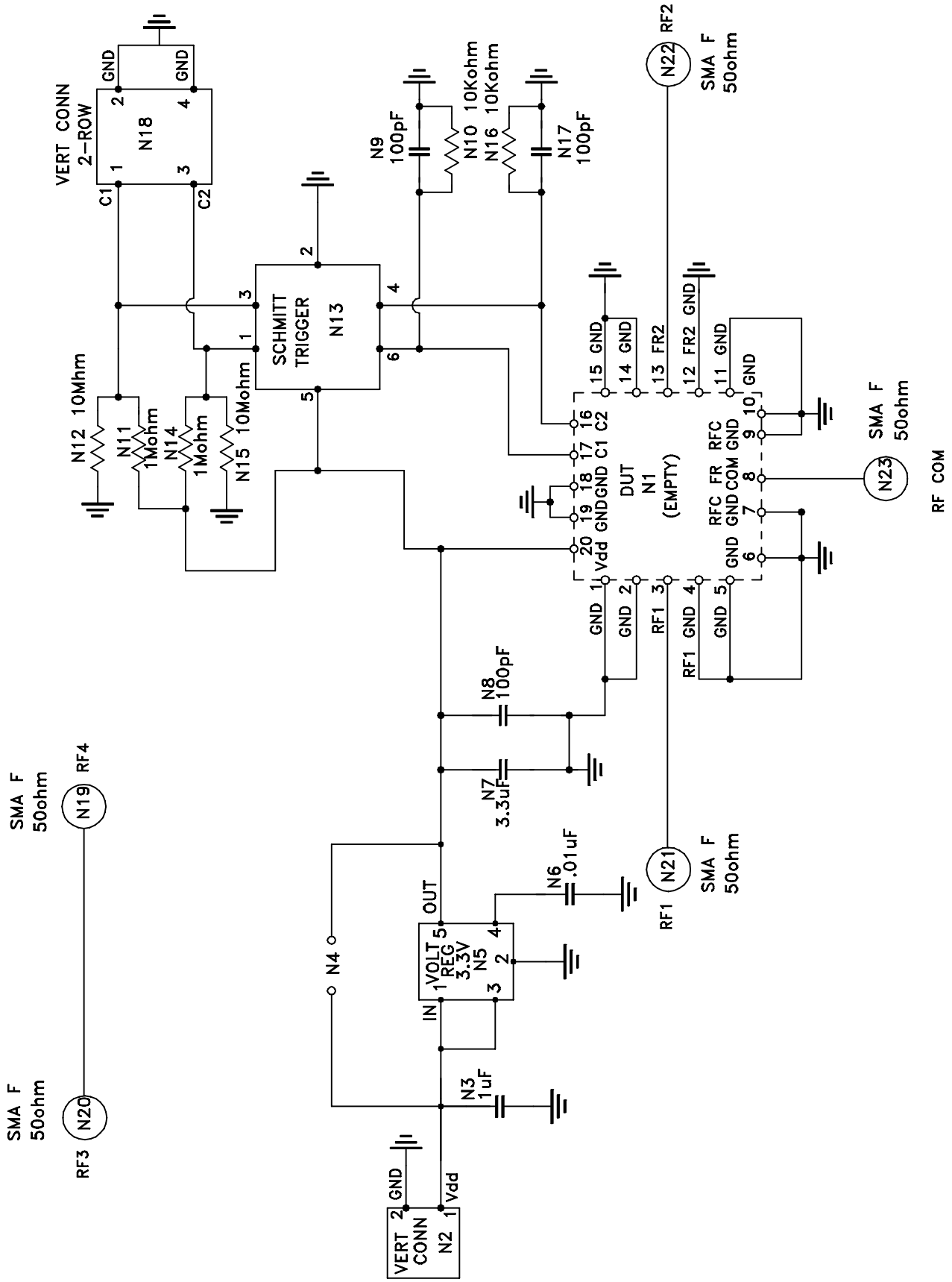

Schematic Diagram

DWG NO: TB-347-20
THIS DOCUMENT AND ITS CONTENTS ARE THE PROPERTY OF MINI-CIRCUITS.

REV: OR
SH: 4/4

Mini-Circuits

Environmental Specifications ENV33

All Mini-Circuits products are manufactured under exacting quality assurance and control standards, and are capable of meeting published specifications after being subjected to any or all of the following physical and environmental test.

Specification	Test/Inspection Condition	Reference/Spec
Operating Temperature	-40° to 85°C Ambient Environment	Individual Model Data Sheet
Storage Temperature	-65° to 150° C Ambient Environment	Individual Model Data Sheet
Temperature Humidity Bias	85°C, 85% RH, 96 hours	JESD22-A101B
Thermal Shock	-55° to 100°C, 100 cycles	MIL-STD-202, Method 107, Condition A-3, except +100°C
Solder Reflow Heat	Pb-Free Process: 260°C peak	J-STD-020, Table 4-1, 4-2 and 5-2; Figure 5-1
Solderability	10X magnification, 95% coverage	JESD22-B102, Method 1: Dip and Look Test
Marking Resistance to Solvents	Laser marked, visual observation	Mini-Circuits D4-Q4T0-04

This document and its contents are the property of Mini-Circuits.