Engineering Development Model

Bandpass Filter BFCN-ED13661/7

SMT

Important Note

This model has been designed, built and tested in our engineering department. Performance data represents model capability.
At present it is a non-catalog model. On request, we can supply a final specification sheet, part number and price/delivery information.

Please click "Back", and then click "Contact Us" for Applications support.

CASE STYLE : FV1206-4

ELECTRICAL SPECIFICATIONS 50Ω @ +25°C							
Parameters		**F#**	**Frequency (MHz)**	**Min.**	**Typ.**	**Max.**	**Units**
Pass Band	Center Frequency				7700		MHz
	Insertion Loss	F1-F2	7500-7900		1.8	3.5	dB
	VSWR	F1-F2	7500-7900		1.4		:1
Stop Band, Lower	Insertion Loss	DC-F5	DC-6500	15	20		dB
		F5-F3	6500-6800		25		dB
	VSWR	DC-F3	DC-6800		30		:1
Stop Band, Upper	Insertion Loss	F4-F6	9000-9600		20		dB
		F6-F7	9600-14000	15	20		dB
	VSWR	F4-F7	9000-14000		30		:1

MAXIMUM RATINGS	
Operating Temperature	-55°C to 100°C
Storage Temperature	-55°C to 100°C
RF Power Input*	2W max. @ 25°C

*Passband rating, derate linearly to 0.5W at 100°C ambient

Functional Schematic

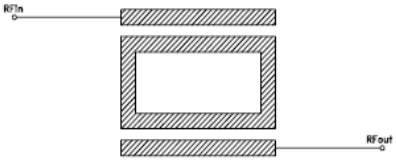

PIN CONNECTIONS	
RF IN	1
RF OUT	3
GROUND	2,4

Ceramic Bandpass Filter BFCN-ED13661/7

Typical Performance Data

FREQUENCY (MHz)	INSERTION LOSS (dB)	RETURN LOSS (dB)
100.0	48.09	0.01
450.0	35.09	0.03
800.0	30.15	0.05
1500.0	24.96	0.09
2200.0	22.11	0.14
2900.0	20.42	0.23
3600.0	19.42	0.34
4300.0	18.78	0.44
5000.0	18.39	0.45
5700.0	19.02	0.34
6400.0	25.20	0.30
6750.0	22.17	0.68
7100.0	6.18	4.15
7200.0	3.70	8.12
7300.0	2.37	15.58
7400.0	1.89	16.71
7450.0	1.82	14.08
7500.0	1.81	12.46
7550.0	1.79	11.47
7600.0	1.80	10.98
7650.0	1.77	10.90
7700.0	1.75	11.18
7750.0	1.71	11.85
7800.0	1.68	12.83
7850.0	1.63	14.52
7900.0	1.63	16.49
7950.0	1.67	18.31
8000.0	1.77	17.47
8050.0	1.97	14.25
8100.0	2.28	11.42
8150.0	2.72	9.02
8200.0	3.27	7.19
8250.0	3.95	5.77
8300.0	4.72	4.69
8350.0	5.59	3.86
8400.0	6.49	3.24
8450.0	7.47	2.76
8500.0	8.44	2.38
8550.0	9.45	2.10
8600.0	10.45	1.87
8650.0	11.46	1.70
8700.0	12.48	1.53
8800.0	14.52	1.31
8900.0	16.60	1.15
9000.0	18.78	1.04
9100.0	21.11	0.94
9200.0	23.73	0.85
9300.0	26.80	0.78
9800.0	29.45	0.64
10300.0	22.20	0.73
10800.0	20.43	0.95
11300.0	20.16	1.15
11800.0	20.77	1.32
12300.0	22.51	1.53
12800.0	24.03	1.78
13300.0	22.65	1.99
13800.0	22.68	1.98
14300.0	22.10	2.06
14800.0	23.65	1.94
15050.0	20.19	2.19

FREQUENCY (MHz)	GROUP DELAY (ns)
100.0	0.25
450.0	0.25
800.0	0.25
1500.0	0.25
2200.0	0.25
2900.0	0.25
3600.0	0.24
4300.0	0.24
5000.0	0.25
5700.0	0.26
6400.0	0.26
7100.0	0.67
7200.0	0.79
7350.0	0.75
7450.0	0.65
7500.0	0.60
7550.0	0.58
7600.0	0.56
7650.0	0.55
7700.0	0.54
7800.0	0.56
7900.0	0.59
8000.0	0.63
8100.0	0.65
8150.0	0.63
8200.0	0.64
8250.0	0.60
8300.0	0.58
8350.0	0.53
8400.0	0.52
8450.0	0.47
8500.0	0.44
8550.0	0.41
8600.0	0.38
8650.0	0.38
8700.0	0.33
8750.0	0.33
8800.0	0.31
8850.0	0.30
8900.0	0.28
8950.0	0.28
9000.0	0.26
9050.0	0.25
9100.0	0.23
9150.0	0.22
9200.0	0.19
9300.0	0.15
9800.0	0.01
10050.0	0.26
10300.0	0.28
10800.0	0.27
11300.0	0.26
11800.0	0.25
12300.0	0.21
12800.0	0.10
13300.0	0.22
13800.0	0.19
14300.0	0.26
14800.0	0.07
15050.0	0.64

Ceramic Bandpass Filter BFCN-ED13661/7

Typical Performance Curves

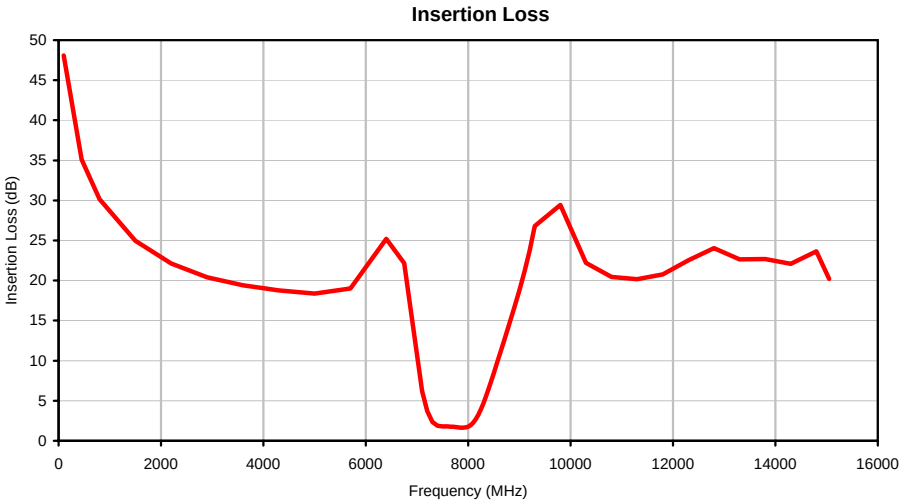

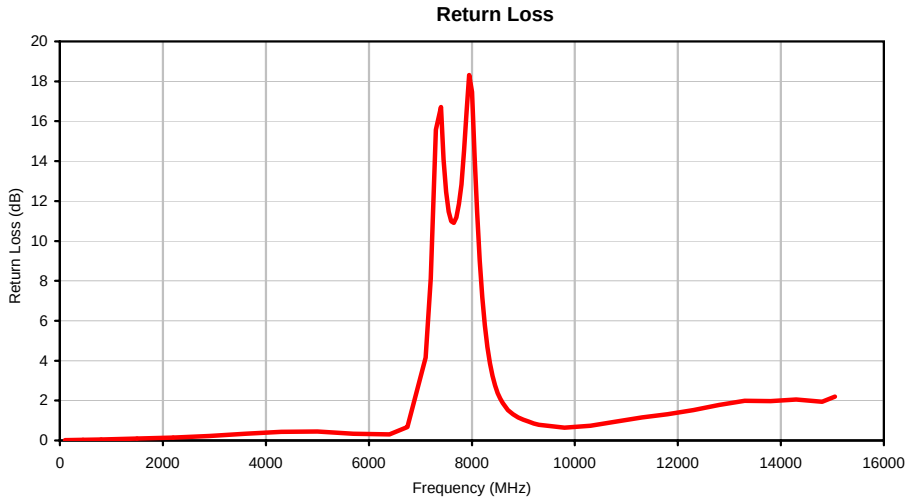

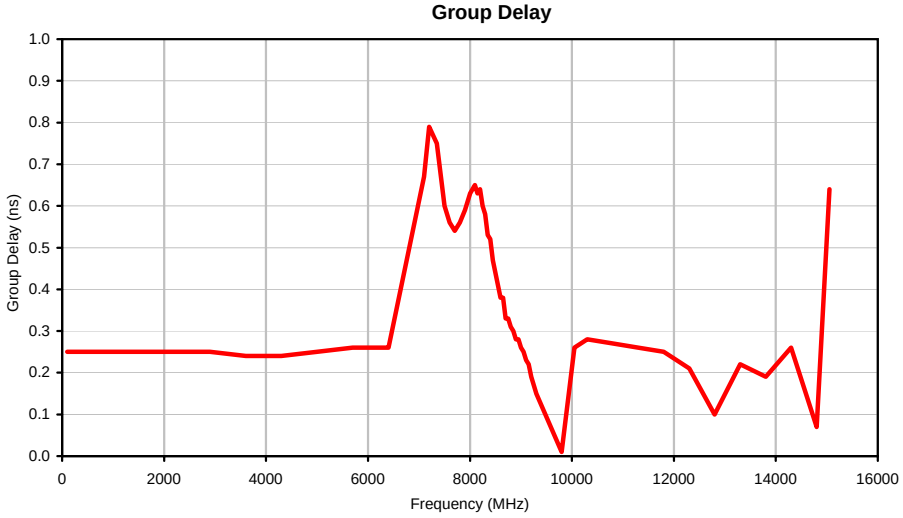

Case Style FV

FV1206-4

Outline Dimensions

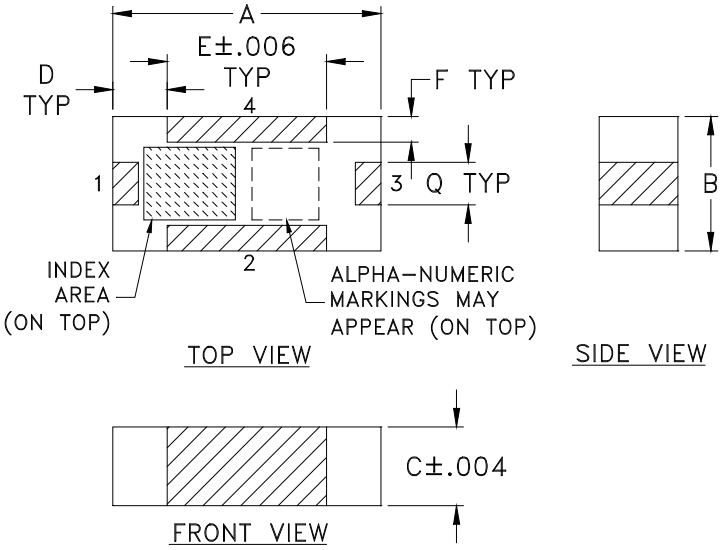

PCB Land Pattern

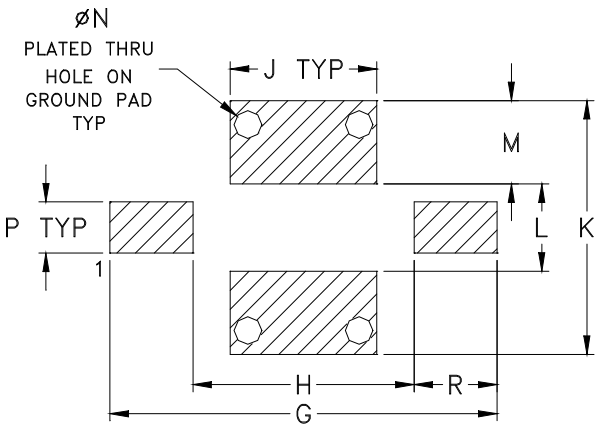

Suggested Layout,
Tolerance to be within ±.002

CASE #	A	B	C	D	E	F	G	H	J	K	L	M
FV1206-4	.126 (3.20)	.063 (1.60)	.037 (0.94)	.026 (0.66)	.075 (1.91)	.012 (0.30)	.182 (4.62)	.104 (2.64)	.069 (1.75)	.119 (3.02)	.041 (1.04)	.039 (0.99)

CASE #	N	P	Q	R	WT. GRAM
FV1206-4	.013 (0.33)	.024 (0.61)	.020 (0.51)	.039 (0.99)	.020

Dimensions are in inches (mm). Tolerances: 2 Pl. ± .01; 3 Pl. ± .005

Notes:

1. Open style, ceramic base.
2. Termination finish: **as shown below or indicated on Data Sheet.**
   For RoHS Case Styles: Tin plate over Nickel plate. All models, (+) suffix.
   For RoHS-5 Case Styles: Tin-Lead plate. All models, no (+) suffix.

This document and its contents are the property of Mini-Circuits.

Tape & Reel Packaging TR-F75

DEVICE ORIENTATION IN T&R

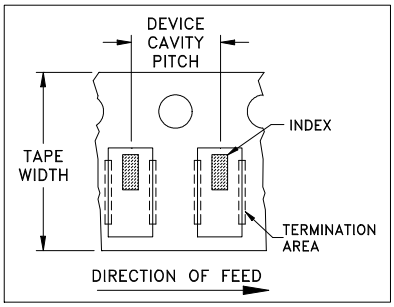

ILLUSTRATION 1

Applicable Case Styles
FV1206-1 FV1206-3

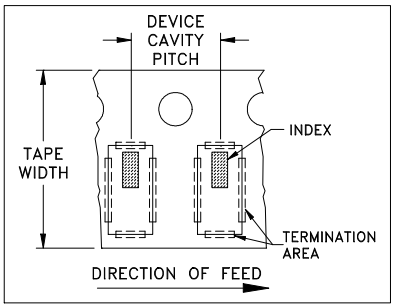

ILLUSTRATION 2

Applicable Case Styles
FV1206-4 FV1206-5 FV1206-6 FV1206-7 FV1206-9

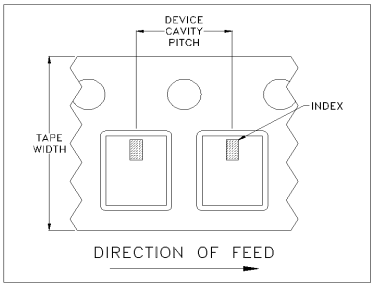

ILLUSTRATION 3

Applicable Case Styles
FV1206-11 FV1206-12 GE0805C-18 NL1008C-6 NL1008C-7 NL1008C-9 NL1008C-10 NL1008C-12

Tape Width, mm	Device Cavity Pitch, mm	Reel Size, inches	Devices per Reel	
8	4	7	Small quantity standards (see note)	20
				50
				100
				200
				500
				1000
			Standard	3000

Note: Please consult individual model data sheet to determine device per reel availability.

Mini-Circuits carrier tape materials provide protection from ESD (Electro-Static Discharge) during handling and transportation. Tapes are static dissipative and comply with industry standards EIA-481/EIA-541.

Go to: www.minicircuits.com/pages/pdfs/tape.pdf

Mini-Circuits®
INTERNET http://www.minicircuits.com
P.O. Box 350166, Brooklyn, New York 11235-0003 (718) 934-4500 Fax (718) 332-4661
Distribution Centers NORTH AMERICA 800-654-7949 • 417-335-5935 • Fax 417-335-5945 • EUROPE 44-1252-832600 • Fax 44-1252-837010
Mini-Circuits ISO 9001 & ISO 14001 Certified

This document and its contents are the property of Mini-Circuits.

THIRD ANGLE PROJECTION

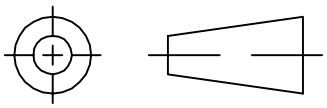

REVISIONS					
REV	ECN No.	DESCRIPTION	DATE	DR	AUTH
OR	M123589	NEW RELEASE	01/15/09	AV	ABD

SUGGESTED MOUNTING CONFIGURATION FOR FV1206-4 CASE STYLE, "04FL01" PIN CODE

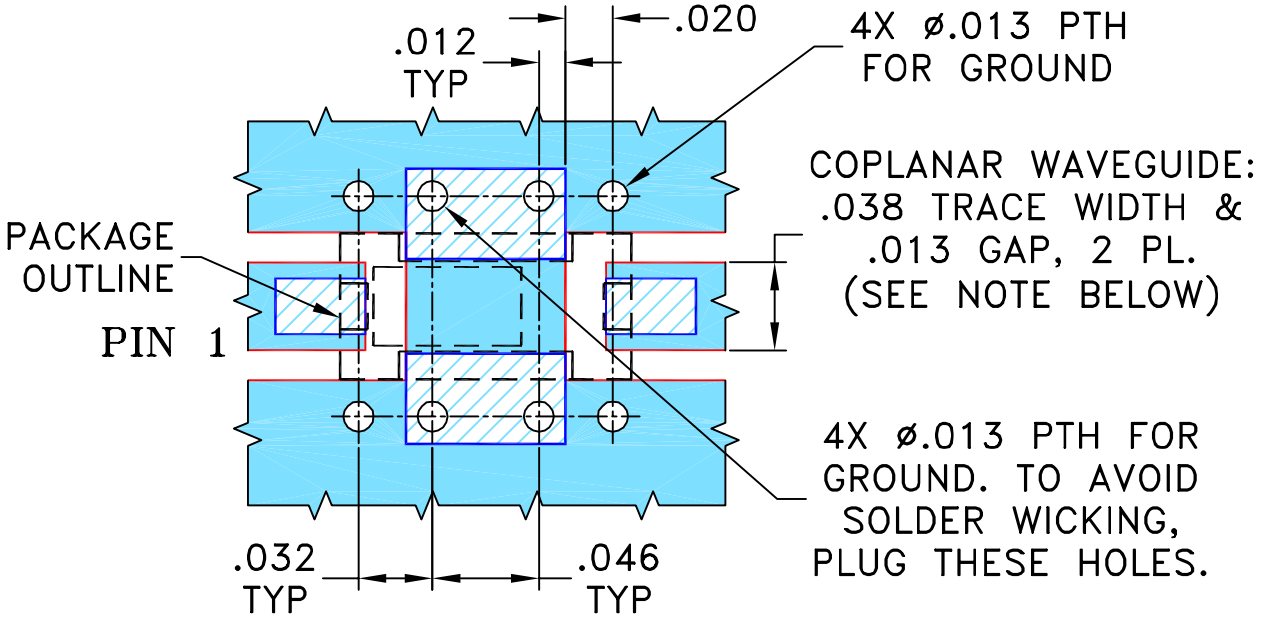

NOTE:
1. TRACE WIDTH IS SHOWN FOR ROGERS RO4350B WITH DIELECTRIC THICKNESS .020" ± .0015". COPPER: 1/2 OZ. EACH SIDE. FOR OTHER MATERIALS TRACE WIDTH MAY NEED TO BE MODIFIED.
2. BOTTOM SIDE OF THE PCB IS CONTINUOUS GROUND PLANE.

DENOTES PCB COPPER LAYOUT WITH SMOBC (SOLDER MASK OVER BARE COPPER)

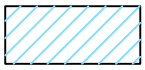

DENOTES COPPER LAND PATTERN FREE OF SOLDER MASK

UNLESS OTHERWISE SPECIFIED		INITIALS	DATE
DIMENSIONS ARE IN INCHES	DRAWN	AV	07/10/09
TOLERANCES ON:	CHECKED	IL	01/15/09
2 PL DECIMALS ±	APPROVED	ABD	01/15/09
3 PL DECIMALS ± .005			
ANGLES ±			
FRACTIONS ±			

Mini-Circuits®

THIS DOCUMENT AND ITS CONTENTS ARE THE PROPERTY OF MINI-CIRCUITS. EXCEPT FOR USE EXPRESSLY GRANTED, IN WRITING, TO ITS VENDORS, VENDEE AND THE UNITED STATES GOVERNMENT, MINI-CIRCUITS RESERVES ALL PROPRIETARY DESIGN, USE , MANUFACTURING AND REPRODUCTION RIGHTS THERETO. THESE CONTENTS SHALL NOT BE USED, DUPLICATED OR DISCLOSED TO ANY OUTSIDE PARTY, IN WHOLE OR IN PART, WITHOUT WRITTEN PERMISSION OF MINI-CIRCUITS.

ASHEETA1.DWG REV:A DATE:01/12/95

Mini-Circuits®
13 Neptune Avenue
Brooklyn NY 11235

PL, 04FL01, FV1206-4, BFCN, TB-518+

SIZE	CODE IDENT	DRAWING NO:	REV:
A	15542	98-PL-305	OR

FILE:	SCALE:	SHEET:
98PL305	12:1	1 OF 1

Evaluation Board and Circuit

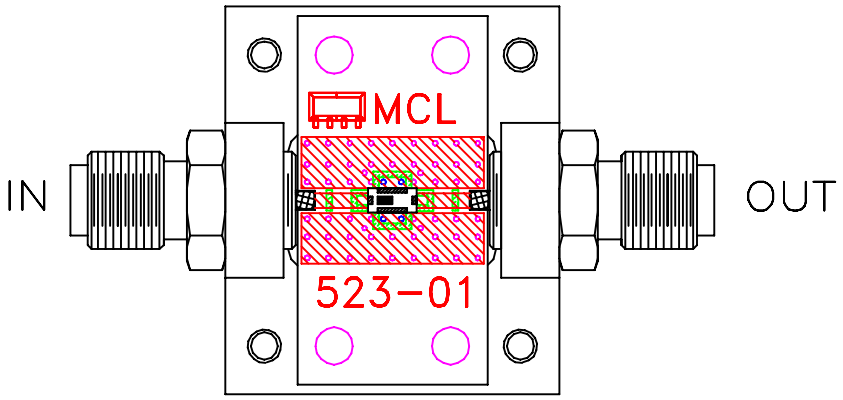

TB-518+

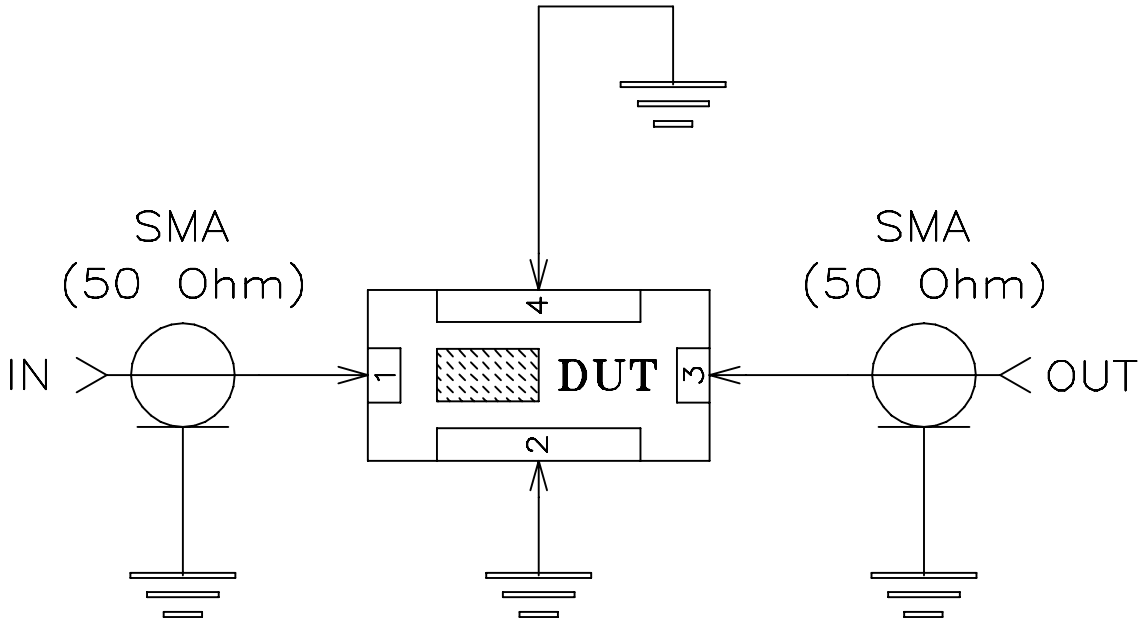

Schematic Diagram

Notes:

1. 50 Ohm SMA Female connectors.
2. PCB Material: RO4350 or equivalent,
   Dielectric Constant=3.5, Thickness=.020 inch.

Mini-Circuits®

THIS DOCUMENT AND ITS CONTENTS ARE THE PROPERTY OF MINI-CIRCUITS.

Mini-Circuits

Environmental Specifications ENV06

All Mini-Circuits products are manufactured under exacting quality assurance and control standards, and are capable of meeting published specifications after being subjected to any or all of the following physical and environmental test.

Specification	Test/Inspection Condition	Reference/Spec
Operating Temperature	-55° to 100°C Ambient Environment	Individual Model Data Sheet
Storage Temperature	-55° to 100° C Ambient Environment	Individual Model Data Sheet
Humidity	90 to 95% RH, 240 hours, 50°C	MIL-STD-202, Method 103, Condition A, Except 50°C and end-point electrical test done within 12 hours
Solder Reflow Heat	Sn-Pb Eutetic Process: 225°C peak Pb-Free Process 245° - 250°C peak	J-STD-020, Table 4-1, 4-2 and 5-2, Figure 5-1
Solderability	10X Magnification	J-STD-002, Para 4.2.5, Test S, 95% Coverage
Vibration (High Frequency)	20g peak, 10-2000 Hz, 12 times in each of three perpendicular directions (total 36)	MIL-STD-202, Method 204, Condition D
Mechanical Shock	50g, 11 ms, 1/2-sine, 18 shocks: 3 each direction, each of 3 axes	MIL-STD-202, Method 213, Condition A

This document and its contents are the property of Mini-Circuits.