Surface Mount

Phase Shifter

JSPHS-42+

50Ω 180° Voltage Variable 300 to 400 MHz

Generic photo used for illustration purposes only

CASE STYLE: BK276

+RoHS Compliant
The +Suffix identifies RoHS Compliance. See our web site for RoHS Compliance methodologies and qualifications

Maximum Ratings

Operating Temperature	-40°C to 85°C
Storage Temperature	-55°C to 100°C
RF Input Power	20 dBm max.
Control Voltage	20V

Permanent damage may occur if any of these limits are exceeded.

Pin Connections

IN	14
OUT	8
BIAS	1,7^
GROUND	2,3,4,5,6,9,10,11,12,13

^ proper operation is achieved with pins 1 or 7 or both connected to BIAS.

Outline Drawing

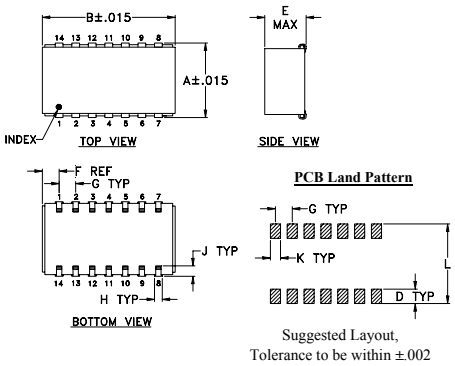

Outline Dimensions (inch / mm)

A	B	C	D	E	F	G
.450	.803	--	.100	.250	.102	.100
11.43	20.40	--	2.54	6.35	2.59	2.54

H	J	K	L	wt
.047	.065	.065	.470	grams
1.19	1.65	1.65	11.94	3.0

Demo Board MCL P/N: TB-152+
Suggested PCB Layout (PL-214)

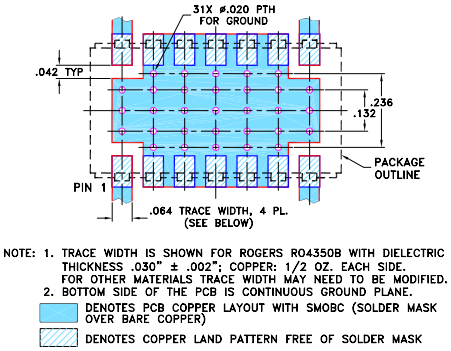

Features

- low insertion loss, 1.4 dB typ.
- good VSWR, 1.3:1 typ.
- J-leads for excellent solderability and strain relief
- aqueous washable

Applications

- signal processing

Phase Shifter Electrical Specifications

FREQUENCY (MHz)	PHASE RANGE (Degrees)	INSERTION LOSS (dB)		CONTROL VOLTAGE (V)	CONTROL BANDWIDTH (kHz)	VSWR (:1)	
	Min.	Typ.	Max.		Typ.	Typ.	Max.
300-400	180	1.4	2.8	0-12	DC-50	1.3	1.9

Maximum operating power, 0 dBm

Typical Performance Data

Control Voltage (V)	Phase Shift* (Degrees)			VSWR (:1)			Insertion Loss (dB)		
	300 MHz	350 MHz	400 MHz	300 MHz	350 MHz	400 MHz	300 MHz	350 MHz	400 MHz
0.00	0.01	0.02	0.02	1.30	1.09	1.38	1.14	0.94	1.02
1.00	22.50	13.98	8.78	1.37	1.07	1.34	1.31	1.01	1.03
2.00	46.51	29.67	18.50	1.44	1.08	1.30	1.47	1.10	1.05
3.00	72.10	48.35	30.23	1.49	1.13	1.24	1.57	1.21	1.08
4.00	98.30	70.96	45.18	1.50	1.18	1.18	1.57	1.34	1.13
5.00	123.35	97.49	64.79	1.46	1.22	1.12	1.46	1.43	1.21
6.00	145.56	126.14	90.15	1.40	1.22	1.08	1.31	1.43	1.32
7.00	163.78	153.25	120.11	1.34	1.17	1.08	1.16	1.34	1.41
8.00	177.71	175.50	150.07	1.30	1.12	1.07	1.04	1.22	1.41
9.00	187.93	191.88	174.89	1.26	1.08	1.08	0.96	1.12	1.35
10.00	195.19	203.50	193.48	1.24	1.07	1.12	0.91	1.05	1.29
11.00	200.36	211.60	206.55	1.22	1.07	1.17	0.88	1.00	1.24
12.00	204.05	217.31	215.68	1.21	1.08	1.21	0.85	0.97	1.20

* Normalized at control voltage = 0V

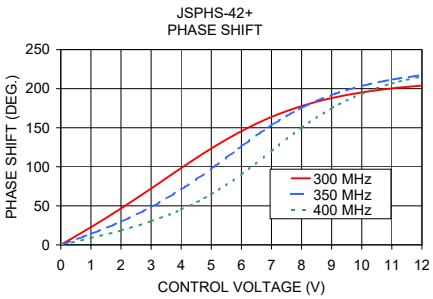

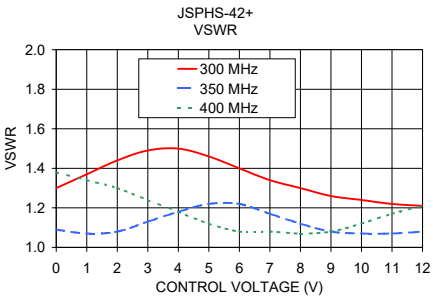

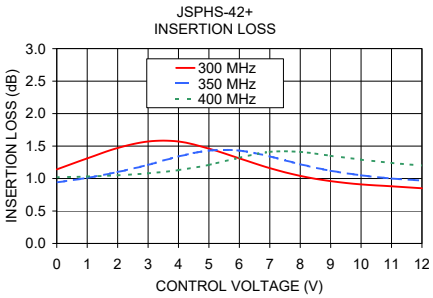

electrical schematic

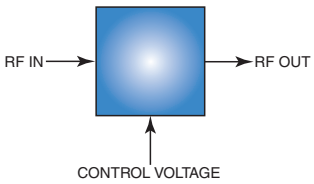

Notes
A. Performance and quality attributes and conditions not expressly stated in this specification document are intended to be excluded and do not form a part of this specification document.
B. Electrical specifications and performance data contained in this specification document are based on Mini-Circuit's applicable established test performance criteria and measurement instructions.
C. The parts covered by this specification document are subject to Mini-Circuits standard limited warranty and terms and conditions (collectively, "Standard Terms"); Purchasers of this part are entitled to the rights and benefits contained therein. For a full statement of the Standard Terms and the exclusive rights and remedies thereunder, please visit Mini-Circuits' website at www.minicircuits.com/MCLStore/terms.jsp

PHASE SHIFTER JSPHS-42+

Typical Performance Data

CONTROL VOLTAGE (V)	PHASE SHIFT* (Deg.)			VSWR (:1)			INSERTION LOSS (dB)		
	300 MHz	350 MHz	400 MHz	300 MHz	350 MHz	400 MHz	300 MHz	350 MHz	400 MHz
0.0	0.01	0.02	0.02	1.30	1.09	1.38	1.14	0.94	1.02
1.0	22.50	13.98	8.78	1.37	1.07	1.34	1.31	1.01	1.03
2.0	46.51	29.67	18.50	1.44	1.08	1.30	1.47	1.10	1.05
3.0	72.10	48.35	30.23	1.49	1.13	1.24	1.57	1.21	1.08
4.0	98.30	70.96	45.18	1.50	1.18	1.18	1.57	1.34	1.13
5.0	123.35	97.49	64.79	1.46	1.22	1.12	1.46	1.43	1.21
6.0	145.56	126.14	90.15	1.40	1.22	1.08	1.31	1.43	1.32
7.0	163.78	153.25	120.11	1.34	1.17	1.08	1.16	1.34	1.41
8.0	177.71	175.50	150.07	1.30	1.12	1.07	1.04	1.22	1.41
9.0	187.93	191.88	174.89	1.26	1.08	1.08	0.96	1.12	1.35
10.0	195.19	203.50	193.48	1.24	1.07	1.12	0.91	1.05	1.29
11.0	200.36	211.60	206.55	1.22	1.07	1.17	0.88	1.00	1.24
12.0	204.05	217.31	215.68	1.21	1.08	1.21	0.85	0.97	1.20

* Normalized at control voltage = 0V

Typical Performance Curves

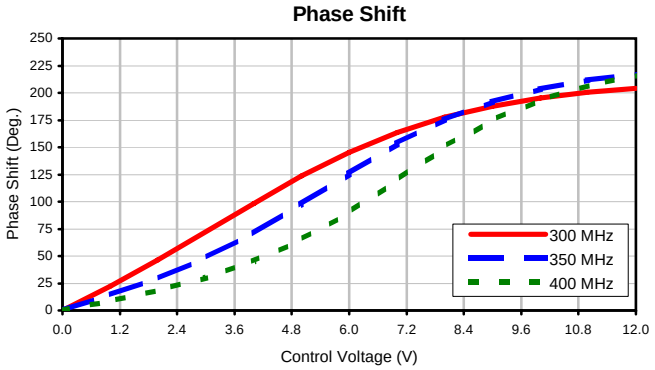

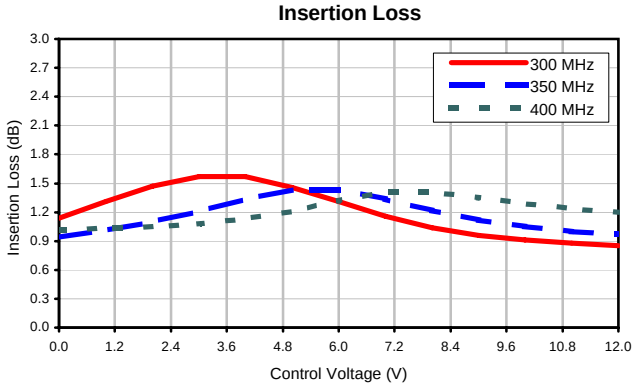

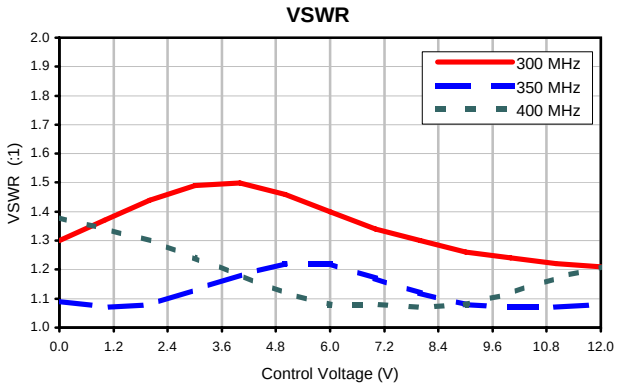

Case Style BK

BK276

Outline Dimensions

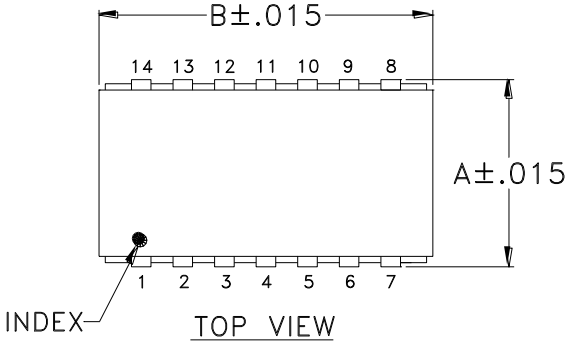

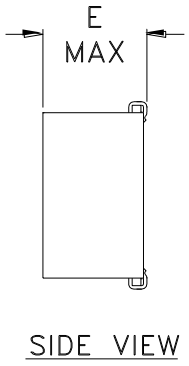

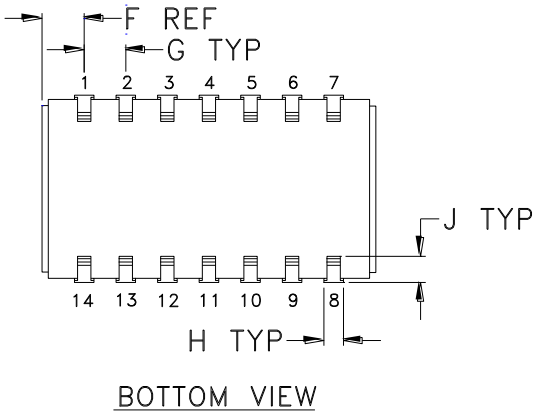

PCB Land Pattern

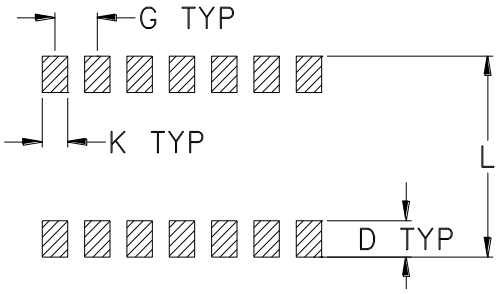

Suggested Layout,
Tolerance to be within ±.002

CASE #	A	B	C	D	E	F	G	H	J	K	L	WT. GRAM
BK276	.450 (11.43)	.803 (20.40)	-- --	.100 (2.54)	.250 (6.35)	.102 (2.59)	.100 (2.54)	.047 (1.19)	.065 (1.65)	.065 (1.65)	.470 (11.94)	2.0 MAX.

Dimensions are in inches (mm). Tolerances: 2Pl. ± .01; 3Pl. ± .005

Notes:

1. Case material: Copper Nickel alloy.
2. Base material: Printed wiring laminate.
3. Termination finish:
   For RoHS Case Styles: Tin plate over Nickel plate. All models, (+) suffix.
   For RoHS-5 Case Styles: Tin-Lead plate. All models, no (+) suffix.

Mini-Circuits®
INTERNET http://www.minicircuits.com
P.O. Box 350166, Brooklyn, New York 11235-0003 (718) 934-4500 Fax (718) 332-4661
Distribution Centers NORTH AMERICA 800-654-7949 • 417-335-5935 • Fax 417-335-5945 • EUROPE 44-1252-832600 • Fax 44-1252-837010

Mini-Circuits ISO 9001 & ISO 14001 Certified

This document and its contents are the property of Mini-Circuits.

Tape & Reel Packaging TR-F5

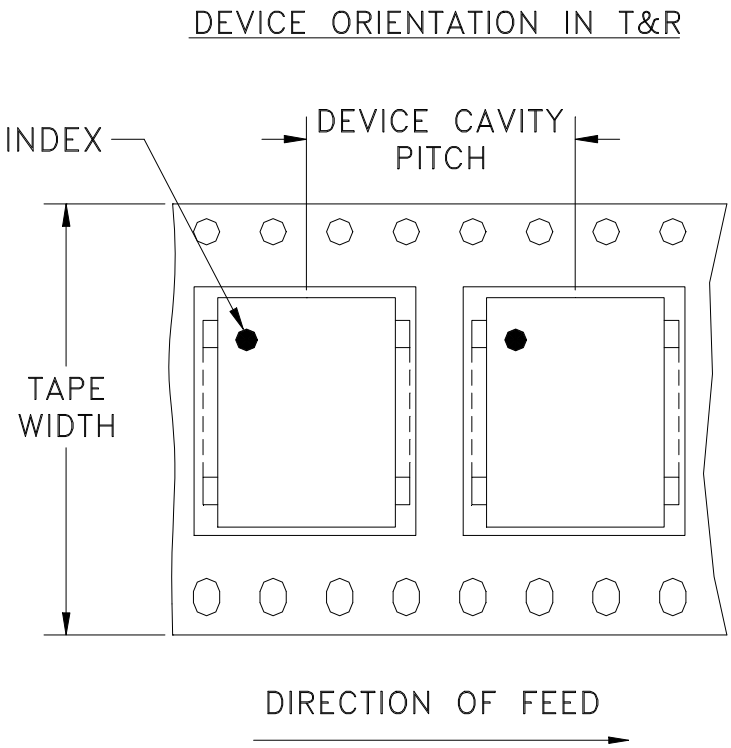

Tape Width, mm	Device Cavity Pitch, mm	Reel Size, inches	Devices per Reel
32	16	13	500

Mini-Circuits carrier tape materials provide protection from ESD (Electro-Static Discharge) during handling and transportation. Tapes are static dissipative and comply with industry standards EIA-481/EIA-541.

Go to: www.minicircuits.com/pages/pdfs/tape.pdf

Mini-Circuits®
INTERNET http://www.minicircuits.com
P.O. Box 350166, Brooklyn, New York 11235-0003 (718) 934-4500 Fax (718) 332-4661
Distribution Centers NORTH AMERICA 800-654-7949 • 417-335-5935 • Fax 417-335-5945 • EUROPE 44-1252-832600 • Fax 44-1252-837010
Mini-Circuits ISO 9001 & ISO 14001 Certified

This document and its contents are the property of Mini-Circuits.

THIRD ANGLE PROJECTION

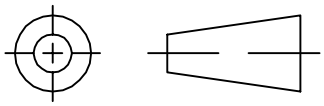

REVISIONS					
REV	ECN No.	DESCRIPTION	DATE	DR	AUTH
OR	M100827	NEW RELEASE	09/21/05	MMG	DJ
A	M102713	ADDED "...WITH SMOBC"	01/13/06	GT	IL

SUGGESTED MOUNTING CONFIGURATION FOR BK276 CASE STYLE, "jb" PIN CONNECTION

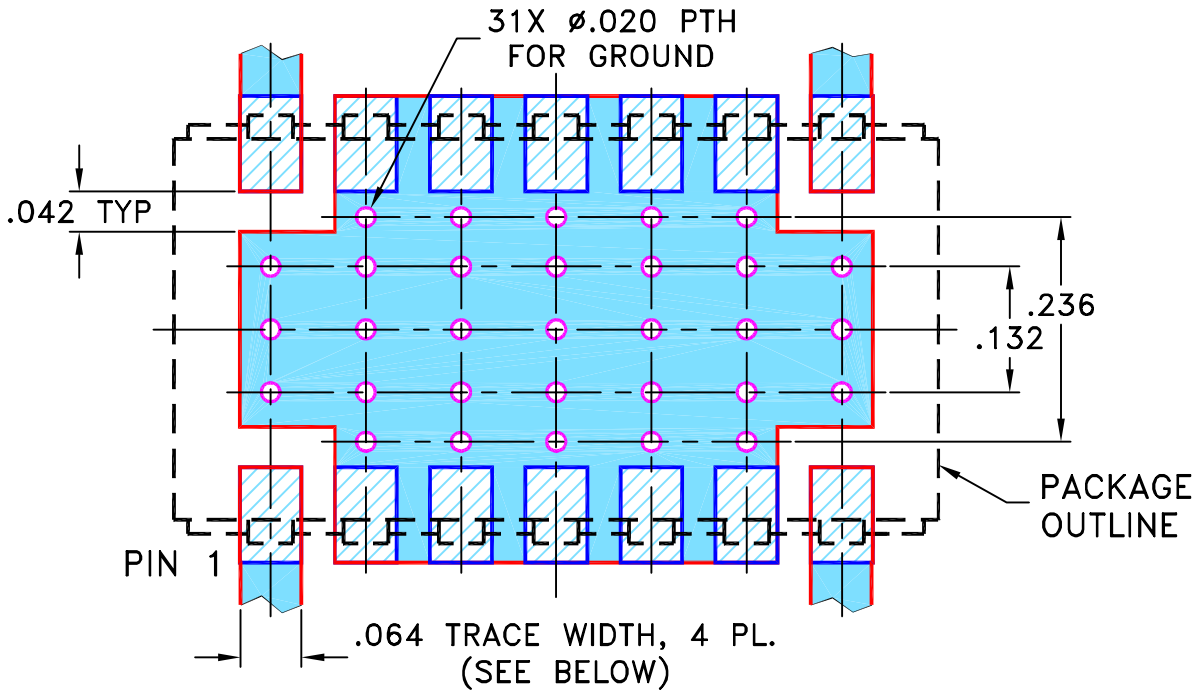

NOTE: 1. TRACE WIDTH IS SHOWN FOR ROGERS RO4350B WITH DIELECTRIC THICKNESS .030" ± .002"; COPPER: 1/2 OZ. EACH SIDE. FOR OTHER MATERIALS TRACE WIDTH MAY NEED TO BE MODIFIED.

2. BOTTOM SIDE OF THE PCB IS CONTINUOUS GROUND PLANE.

DENOTES PCB COPPER LAYOUT WITH SMOBC (SOLDER MASK OVER BARE COPPER)

DENOTES COPPER LAND PATTERN FREE OF SOLDER MASK

UNLESS OTHERWISE SPECIFIED		INITIALS	DATE
DIMENSIONS ARE IN INCHES	DRAWN	MMG	09/20/05
TOLERANCES ON:	CHECKED	IL	09/21/05
2 PL DECIMALS ±	APPROVED	DJ	09/21/05
3 PL DECIMALS ± .005			
ANGLES ±			
FRACTIONS ±			

Mini-Circuits®

THIS DOCUMENT AND ITS CONTENTS ARE THE PROPERTY OF MINI-CIRCUITS. EXCEPT FOR USE EXPRESSLY GRANTED, IN WRITING, TO ITS VENDORS, VENDEE AND THE UNITED STATES GOVERNMENT, MINI-CIRCUITS RESERVES ALL PROPRIETARY DESIGN, USE , MANUFACTURING AND REPRODUCTION RIGHTS THERETO. THESE CONTENTS SHALL NOT BE USED, DUPLICATED OR DISCLOSED TO ANY OUTSIDE PARTY, IN WHOLE OR IN PART, WITHOUT WRITTEN PERMISSION OF MINI-CIRCUITS.

ASHEETA1.DWG REV:A DATE:01/12/95

Mini-Circuits® 13 Neptune Avenue Brooklyn NY 11235

PL, jb, BK276, JSPHS, TB-152

SIZE	CODE IDENT	DRAWING NO:	REV:
A	15542	98-PL-214	A

FILE:	SCALE:	SHEET:
98PL214	5:1	1 OF 1

Evaluation Board and Circuit

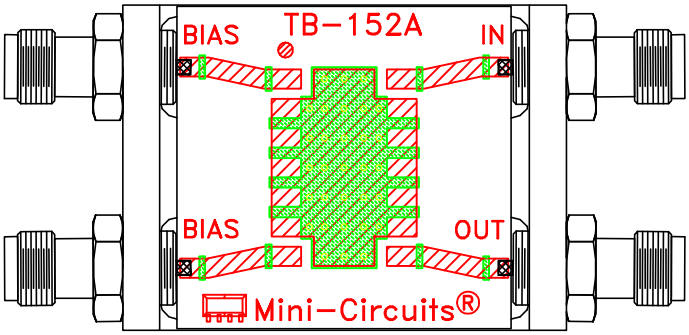

TB-152+

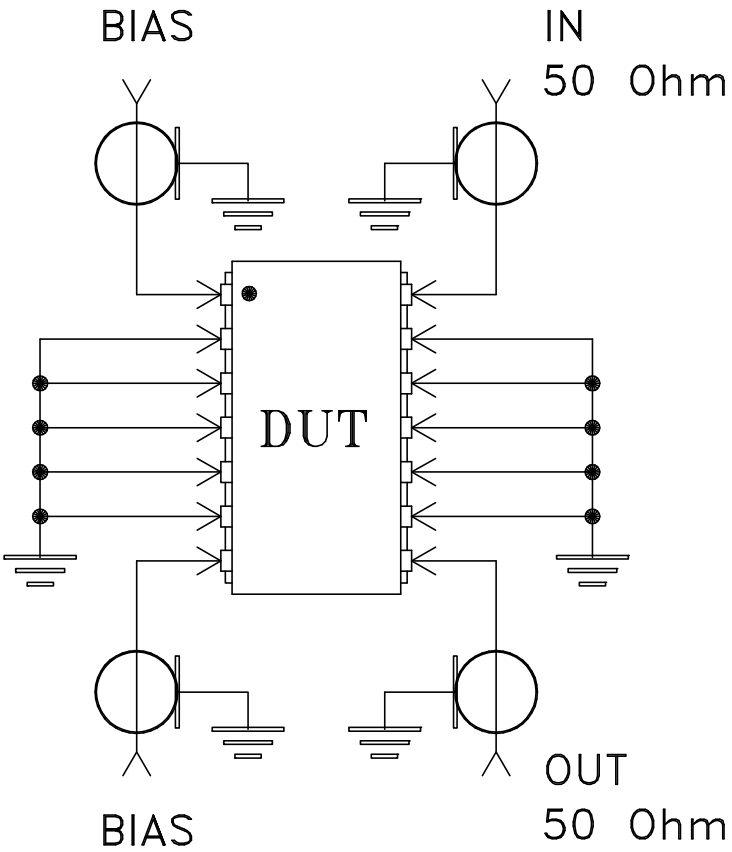

Schematic Diagram

Notes:

1. SMA Female connectors.
2. PCB Material: Rogers RO4350 or equivalent, Dielectric Constant=3.5, Thickness=.030 inch.

Mini-Circuits®

THIS DOCUMENT AND ITS CONTENTS ARE THE PROPERTY OF MINI-CIRCUITS.

Mini-Circuits

Environmental Specifications ENV02T1

All Mini-Circuits products are manufactured under exacting quality assurance and control standards, and are capable of meeting published specifications after being subjected to any or all of the following physical and environmental test.

Specification	Test/Inspection Condition	Reference/Spec
Operating Temperature	-40° to 85°C Ambient Environment	Individual Model Data Sheet
Storage Temperature	-55° to 100° C Ambient Environment	Individual Model Data Sheet
Humidity	90 to 95% RH, 240 hours, 50°C	MIL-STD-202, Method 103, Condition A, Except 50°C and end-point electrical test done within 12 hours
Thermal Shock	-55° to 100°C, 100 cycles	MIL-STD-202, Method 107, Condition A-3, except +100°C
Solder Reflow Heat	Sn-Pb Eutetic Process: 225°C peak Pb-Free Process 245° - 250°C peak	J-STD-020, Table 4-1, 4-2 and 5-2, Figure 5-1
Solderability	10X Magnification	J-STD-002, 95% Coverage
Vibration (High Frequency)	20g peak, 10-2000 Hz, 12 times in each of three perpendicular directions (total 36)	MIL-STD-202, Method 204, Condition D
Mechanical Shock	50g, 11 ms, 1/2-sine, 18 shocks: 3 each direction, each of 3 axes	MIL-STD-202, Method 213, Condition A
Marking Resistance to Solvents	Isopropyl alcohol + mineral spirits at 25°C; terpene defluxer at 25°C; distilled water + proylene glycol monomethyl ether + monoethanolamine at 63°C to 70°C	MIL-STD-202, Method 215

This document and its contents are the property of Mini-Circuits.