COAXIAL

Adapter

KF-KM50+

50Ω DC to 40 GHz 2.92mm-Female to 2.92mm-Male

THE BIG DEAL

- Ultra-Wideband, DC to 40 GHz
- Flat Response
- Low Insertion Loss, 0.09 dB
- Excellent VSWR, 1.04:1

Generic photo used for illustration purposes only

Model No.	KF-KM50+
Case Style	DJ1861
Connectors	2.92 mm-F to 2.92 mm-M

+RoHS Compliant
The +Suffix identifies RoHS Compliance.
See our website for methodologies and qualifications

APPLICATIONS

- Interconnection of RF cable and equipment

PRODUCT OVERVIEW

Mini-Circuits' KF-KM50+ is a coaxial 2.92mm-F to 2.92mm-M adapter supporting a wide range of applications from DC to 40 GHz. This model provides excellent VSWR, low insertion loss, and flat response versus frequency. The KF-KM50+ features rugged, passivated stainless steel construction and measures only 0.77" (l) x 0.36" (dia.).

KEY FEATURES

Features	Advantages
Wideband, DC to 40 GHz	Wide frequency range provides application flexibility and makes this model ideal for broadband and multi-band use.
Excellent VSWR, 1.04:1	Provides good matching for 50Ω systems and minimizes signal reflections across wide frequency range.
Low insertion loss, 0.09 dB	Provides excellent signal power transmission from input to output.
Rugged, passivated stainless steel construction.	Stands up to wear and tear in demanding environments and provides excellent reliability.
Very wide operating temperature range, -55 to +100˚C	Withstands extreme operating conditions and is suitable for use near high power componentry where heat rise is common.

ELECTRICAL SPECIFICATIONS AT 25°C

Parameter	Condition (GHz)	Min.	Typ.	Max.	Units
Frequency Range	-	DC	-	40	GHz
Insertion Loss	DC-40	-	0.09	-	dB
VSWR	DC-18	-	1.03	1.15	:1
	DC-26	-	1.04	1.15	
	DC-40	-	1.04	1.15	

ABSOLUTE MAXIMUM RATINGS

Parameter	Ratings
Operating Temperature	-55°C to +100°C
Storage Temperature	-55°C to +100°C

Permanent damage may occur if any of these limits are exceeded.

COAXIAL

Adapter

KF-KM50+

50Ω DC to 40 GHz 2.92mm-Female to 2.92mm-Male

COAXIAL CONNECTIONS

Connector 1	2.92 mm-F
Connector 2	2.92 mm-M

OUTLINE DRAWING

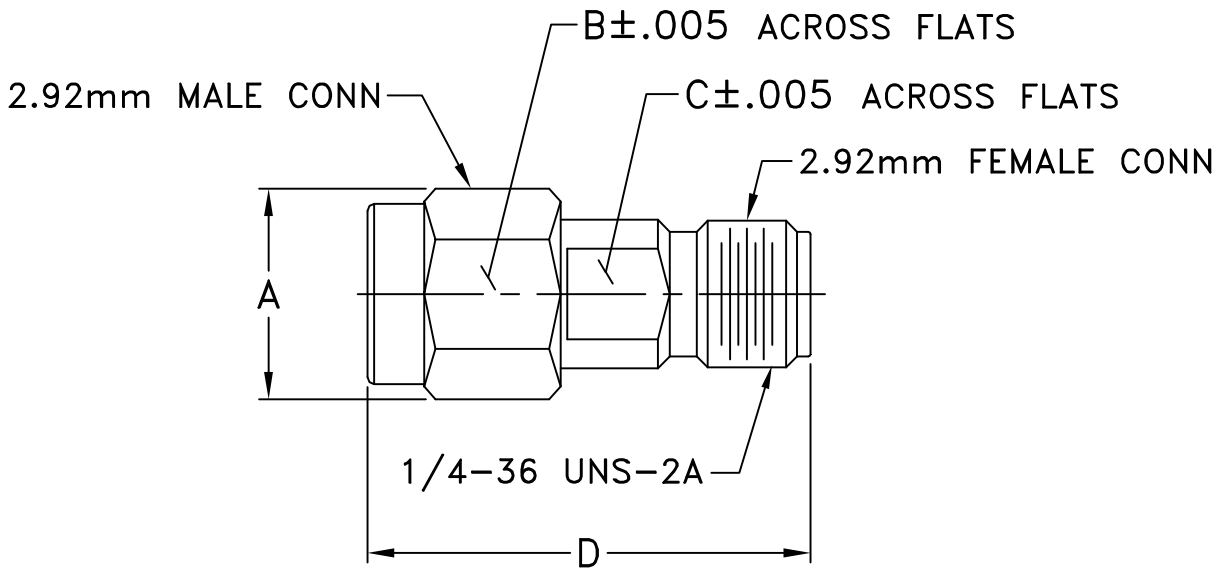

OUTLINE DIMENSIONS (Inches / mm)

A	B	C	D	E	wt
0.36	0.312	0.234	0.77	--	grams
9.14	7.93	5.95	19.50	--	3.8

TYPICAL PERFORMANCE DATA AND CHARTS

Frequency (GHz)	Insertion Loss (dB)	VSWR (:1)	
		2.92 mm-Female	2.92 mm-Male
0.05	0.02	1.04	1.04
0.10	0.03	1.02	1.02
0.50	0.05	1.02	1.02
1.00	0.06	1.02	1.02
2.00	0.07	1.02	1.03
5.00	0.09	1.03	1.04
10.00	0.11	1.01	1.03
15.00	0.10	1.04	1.04
18.00	0.10	1.05	1.07
20.00	0.10	1.06	1.09
22.00	0.10	1.05	1.10
24.00	0.10	1.04	1.08
26.00	0.10	1.05	1.05
28.00	0.10	1.05	1.03
30.00	0.11	1.04	1.01
32.00	0.11	1.02	1.02
34.00	0.12	1.02	1.05
36.00	0.12	1.03	1.07
38.00	0.12	1.03	1.06
40.00	0.12	1.02	1.06

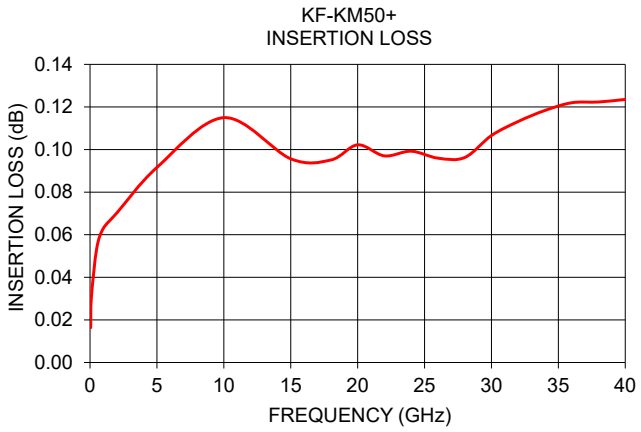

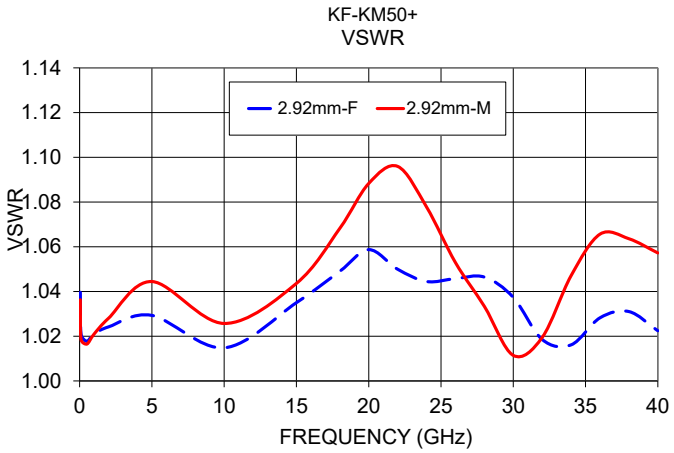

NOTES

A. Performance and quality attributes and conditions not expressly stated in this specification document are intended to be excluded and do not form a part of this specification document.
B. Electrical specifications and performance data contained in this specification document are based on Mini-Circuit's applicable established test performance criteria and measurement instructions.
C. The parts covered by this specification document are subject to Mini-Circuits standard limited warranty and terms and conditions (collectively, "Standard Terms"); Purchasers of this part are entitled to the rights and benefits contained therein. For a full statement of the standard terms and the exclusive rights and remedies thereunder, please visit Mini-Circuits' website at www.minicircuits.com/terms/viewterm.html

Adapter, 2.92mm Female to 2.92mm Male KF-KM50+

Typical Performance Data

FREQUENCY (GHz)	INSERTION LOSS (dB)	2.92mm-FEMALE VSWR (:1)	2.92mm-MALE VSWR (:1)
0.05	0.02	1.04	1.04
0.1	0.03	1.02	1.02
0.5	0.05	1.02	1.02
1	0.06	1.02	1.02
2	0.07	1.02	1.03
3	0.08	1.03	1.03
4	0.09	1.03	1.04
5	0.09	1.03	1.04
10	0.11	1.01	1.03
15	0.10	1.04	1.04
16	0.10	1.04	1.05
18	0.10	1.05	1.07
20	0.10	1.06	1.09
22	0.10	1.05	1.10
24	0.10	1.04	1.08
26	0.10	1.05	1.05
28	0.10	1.05	1.03
30	0.11	1.04	1.01
32	0.11	1.02	1.02
34	0.12	1.02	1.05
36	0.12	1.03	1.07
38	0.12	1.03	1.06
40	0.12	1.02	1.06

Adapter, 2.92mm Female to 2.92mm Male KF-KM50+

Typical Performance Curves

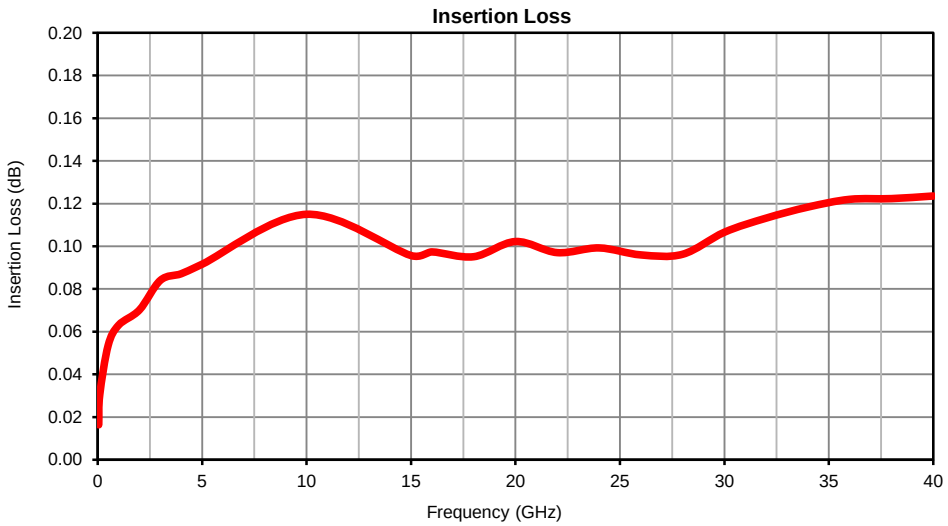

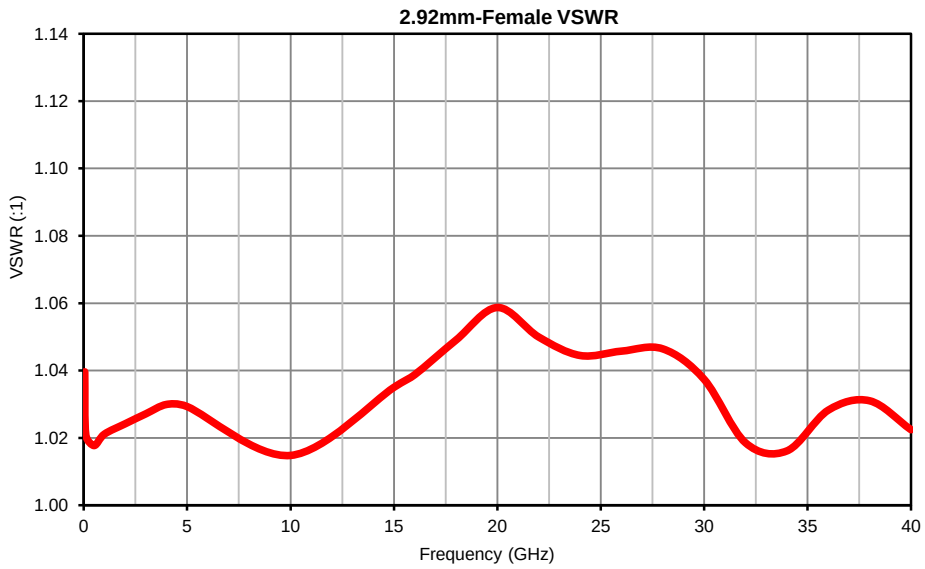

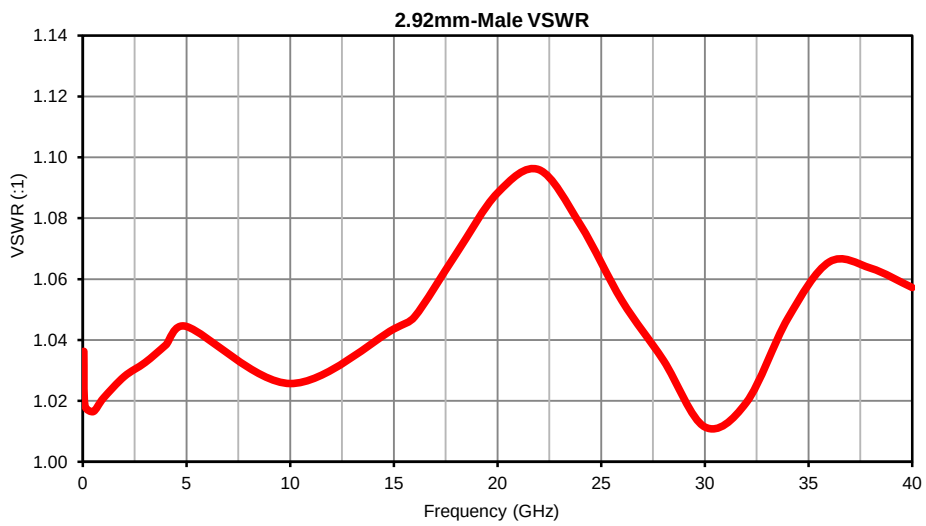

Case Style DJ

DJ1861

Outline Dimensions

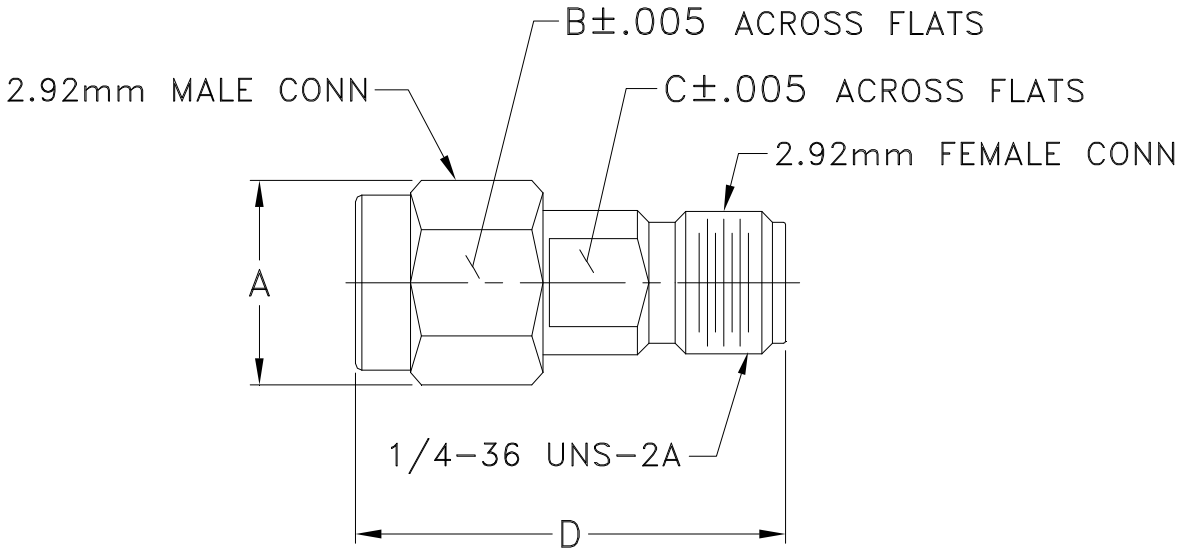

CASE #	A	B	C	D	E	WT. GRAM
DJ1861	.36 (9.14)	.312 (7.93)	.234 (5.95)	.77 (19.50)	-- --	3.8

Dimensions are in inches (mm). Tolerances: 2 Pl. ± .03; 3Pl. + .015

Notes:

1. Case material:Stainless Steel.
2. Finish: Passivation.

This document and its contents are the property of Mini-Circuits

Mini-Circuits

Environmental Specifications ENV70

All Mini-Circuits products are manufactured under exacting quality assurance and control standards, and are capable of meeting published specifications after being subjected to any or all of the following physical and environmental test.

Specification	Test/Inspection Condition	Reference/Spec
Operating Temperature	-55° to 100° C or -55° to 85° C Ambient Environment	Individual Model Data Sheet
Storage Temperature	-55° to 100° C Ambient Environment	Individual Model Data Sheet
Thermal Shock	-55° to 100°C, 100 cycles	MIL-STD-202, Method 107, condition B -3, except over -55° to 100°C
Connector Durability	500 mating/unmating cycles	MIL-PRF-39012E, PARAGRAPH 4.6.12
Drop Test	3' height, 3 times	

This document and its contents are the property of Mini-Circuits.