*Engineering Development Model*

# Frequency Synthesizer KSN-EDR10139

## Important Note

This model has been designed, built and tested in our engineering department. Performance data represents model capability.
At present it is a non-catalog model. On request, we can supply a final specification sheet, part number and price/delivery information.

Please click "Back", and then click "Contact Us" for Applications support.

**CASE STYLE : DK1042**

Not recommended for new designs. Contact applications and/or your account manager for an alternative.

| ELECTRICAL SPECIFICATIONS 50Ω, over -45°C to +85°C | | | | |
|---|---|---|---|---|
| **Parameter** | **Min.** | **Typ.** | **Max.** | **Units** |
| **Frequency** | 1090 | | 1090 | MHz |
| **Step size** | | 10000 | | kHz |
| **Settling Time** Within ±1kHz | | 25 | | msec |
| **Output Power** | +4 | +7 | +11 | dBm |
| **Phase Noise** | | | | |
| at 100 Hz offset | | -82 | | dBc/Hz |
| at 1 kHz offset | | -99 | -94 | dBc/Hz |
| at 10 KHz offset | | -104 | -100 | dBc/Hz |
| at 100 KHz offset | | -99 | -120 | dBc/Hz |
| at 1000 kHz offset | | -156 | -151 | dBc/Hz |
| **Integrated SSB Phase Noise** | | -57 | | dBc |
| **Reference Spurious Suppression** | | -98 | | dBc |
| **Comparison Spurious Suppression** | | -98 | | dBc |
| **Non-Harm. Spurious Suppression** | | -90 | | dBc |
| **Harmonic Suppression** | | -29 | -23 | dBc |
| **Supply voltage** VCO | | 5 | | V |
| **Supply voltage** PLL | | 5 | | V |
| **Supply current** VCO | | 56 | 64 | V |
| **Supply current** PLL | | 17 | 25 | V |
| **Reference In (Internal)** Frequency | | 20 | | MHz |
| **Reference In (Internal)** Amplitude | | 1 | | Vp-p |
| **Reference In (Internal)** Impedance | | 100 | | kΩ |
| **Reference In (Internal)** Ph. N @ 1kHz | | -145 | | dBc/Hz |
| **Digital Lock Detect** Locked | 4.6 | | 5 | V |
| **Digital Lock Detect** Unlocked | | | 0.4 | V |
| **Frequency Synthesizer PLL** | Self-programmed (internal microcontroller) | | | |

| ABSOLUTE MAXIMUM RATINGS | |
|---|---|
| **Operating Temperature** | -45°C to 85°C |
| **Storage Temperature** | -55°C to 100°C |
| **VCO Supply Voltage** | 6V |
| **PLL Supply Voltage** | 6V |

Power On sequence: Vcc VCO followed by Vcc PLL
Power Off sequence: Vcc PLL followed by Vcc VCO

| PIN CONNECTIONS | | | |
|---|---|---|---|
| **RF OUT** | 7 | **N.C** | 3,10,11,12 |
| **VCC VCO** | 5 | **GROUND** | 2,4,6,8,13,14 |
| **VCC PLL** | 1 | | |
| **LOCK DETECT** | 9 | | |

Notes
A. Performance and quality attributes and conditions not expressly stated in this specification document are intended to be excluded and do not form a part of this specification document.
B. Electrical specifications and performance data contained in this specification document are based on Mini-Circuit's applicable established test performance criteria and measurement instructions.
C. The parts covered by this specification document are subject to Mini-Circuits standard limited warranty and terms and conditions (collectively, "Standard Terms"); Purchasers of this part are entitled to the rights and benefits contained therein. For a full statement of the Standard Terms and the exclusive rights and remedies thereunder, please visit Mini-Circuits' website at www.minicircuits.com/MCLStore/terms.jsp

# Frequency Synthesizer KSN-EDR10139

## *Typical Performance Data*

| FREQ. (MHz) | POWER OUTPUT (dBm) | | | HARMONICS (dBc) | | | | | | VCO CURRENT (mA) | | | PLL CURRENT (mA) | | |
|---|---|---|---|---|---|---|---|---|---|---|---|---|---|---|---|
| | | | | F2 | | | F3 | | | | | | | | |
| | -45ºC | +25ºC | +85ºC | -45ºC | +25ºC | +85ºC | -45ºC | +25ºC | +85ºC | -45ºC | +25ºC | +85ºC | -45ºC | +25ºC | +85ºC |
| 1090 | 7.40 | 7.13 | 6.66 | -24.92 | -28.79 | -31.13 | -24.92 | -28.79 | -31.13 | 53.62 | 55.93 | 57.22 | 15.50 | 17.28 | 18.96 |

| FREQ. (MHz) | PHASE NOISE (dBc/Hz) @ OFFSETS | | | | | | | | | | | | | | |
|---|---|---|---|---|---|---|---|---|---|---|---|---|---|---|---|
| | -45ºC | | | | | +25ºC | | | | | +85ºC | | | | |
| | 100Hz | 1kHz | 10kHz | 100kHz | 1MHz | 100Hz | 1kHz | 10kHz | 100kHz | 1MHz | 100Hz | 1kHz | 10kHz | 100kHz | 1MHz |
| 1090 | -77.12 | -96.66 | -103.96 | -123.46 | -155.90 | -81.60 | -99.20 | -103.95 | -124.30 | -155.96 | -78.49 | -98.64 | -102.73 | -123.22 | -154.35 |

| REFERENCE & COMPARISON SPURIOUS ORDER | REFERENCE SPURIOUS @Fcarrier 1090 MHz± (n*Fcomparison) (dBc) NOTE 1 | | | COMPARISON SPURIOUS @Fcarrier 1090 MHz± (n*Fcomparison) (dBc) NOTE 2 | | |
|---|---|---|---|---|---|---|
| n | -45ºC | +25ºC | +85ºC | -45ºC | +25ºC | +85ºC |
| -5 | -97.54 | -94.61 | -105.25 | -97.86 | -94.73 | -101.01 |
| -4 | -98.03 | -96.24 | -109.73 | -113.68 | -102.29 | -104.06 |
| -3 | -102.68 | -97.54 | -105.96 | -97.18 | -98.35 | -109.86 |
| -2 | -113.68 | -102.29 | -104.06 | -101.37 | -99.74 | -104.73 |
| -1 | -101.37 | -99.74 | -104.73 | -102.19 | -96.1 | -99.25 |
| 0 note 3 | - | - | - | - | - | - |
| +1 | -107.35 | -102.9 | -101.37 | -93.36 | -96.92 | -99.74 |
| +2 | -105.80 | -99.02 | -100.81 | -107.35 | -102.9 | -101.37 |
| +3 | -99.24 | -99.22 | -99.12 | -94.30 | -94.55 | -105.85 |
| +4 | -101.38 | -99.13 | -104.66 | -105.80 | -99.02 | -100.81 |
| +5 | -93.88 | -91.51 | -94.83 | -100.70 | -101.29 | -113.34 |

Note 1: Reference frequency 20 MHz.
Note 2: Comparison frequency 10 MHz.
Note 3: All spurs are referenced to carrier signal (n=0).

Notes
A. Performance and quality attributes and conditions not expressly stated in this specification document are intended to be excluded and do not form a part of this specification document.
B. Electrical specifications and performance data contained in this specification document are based on Mini-Circuit's applicable established test performance criteria and measurement instructions.
C. The parts covered by this specification document are subject to Mini-Circuits standard limited warranty and terms and conditions (collectively, "Standard Terms"); Purchasers of this part are entitled to the rights and benefits contained therein. For a full statement of the Standard Terms and the exclusive rights and remedies thereunder, please visit Mini-Circuits' website at www.minicircuits.com/MCLStore/terms.jsp

## *Typical Performance Data*

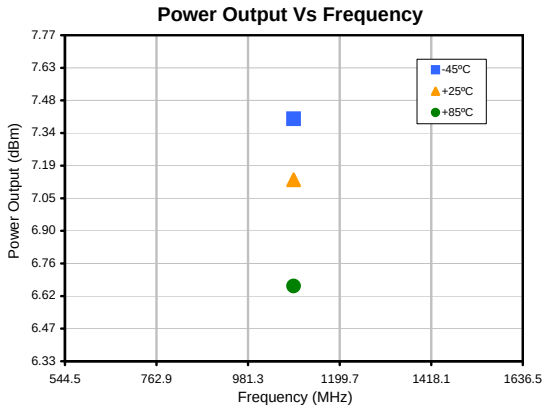


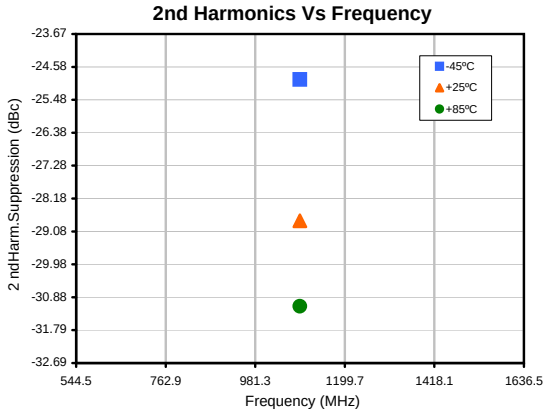


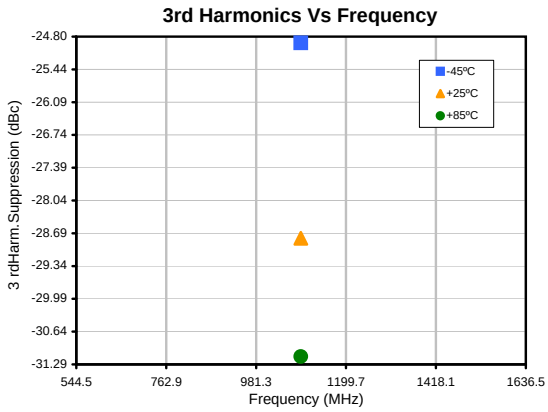


Notes
A. Performance and quality attributes and conditions not expressly stated in this specification document are intended to be excluded and do not form a part of this specification document.
B. Electrical specifications and performance data contained in this specification document are based on Mini-Circuit's applicable established test performance criteria and measurement instructions.
C. The parts covered by this specification document are subject to Mini-Circuits standard limited warranty and terms and conditions (collectively, "Standard Terms"); Purchasers of this part are entitled to the rights and benefits contained therein. For a full statement of the Standard Terms and the exclusive rights and remedies thereunder, please visit Mini-Circuits' website at www.minicircuits.com/MCLStore/terms.jsp

## *Typical Performance Data*

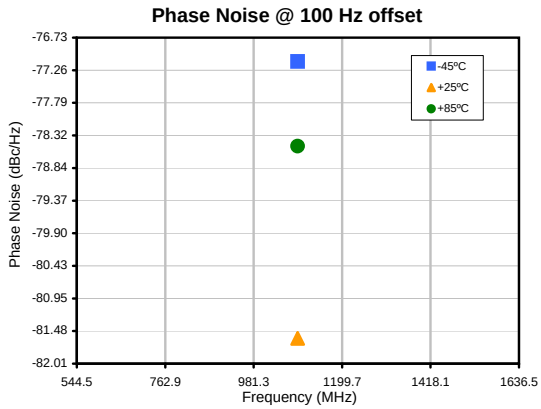


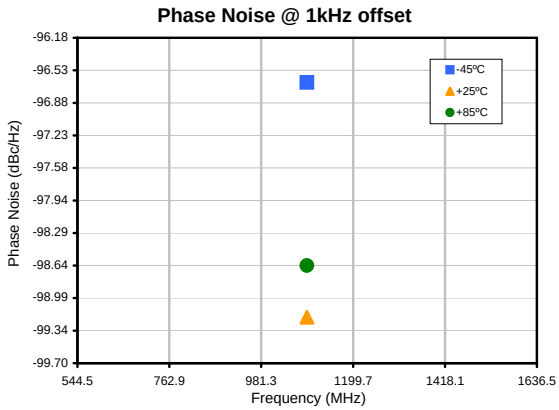


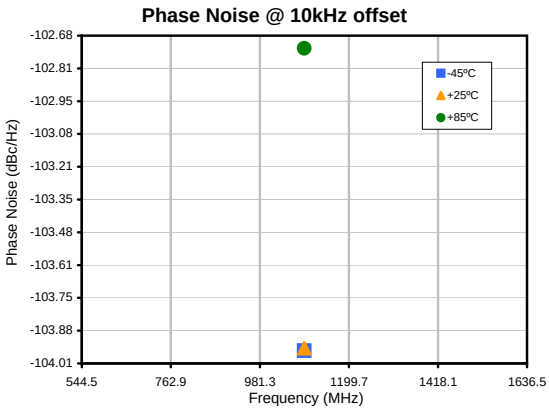


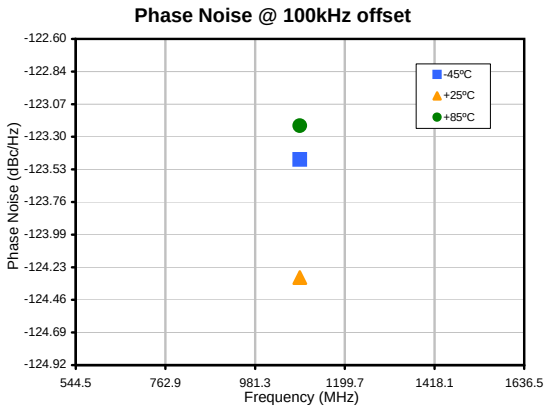


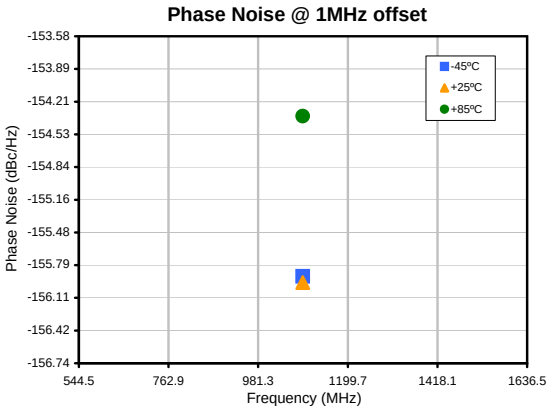



Notes
A. Performance and quality attributes and conditions not expressly stated in this specification document are intended to be excluded and do not form a part of this specification document.
B. Electrical specifications and performance data contained in this specification document are based on Mini-Circuit's applicable established test performance criteria and measurement instructions.
C. The parts covered by this specification document are subject to Mini-Circuits standard limited warranty and terms and conditions (collectively, "Standard Terms"); Purchasers of this part are entitled to the rights and benefits contained therein. For a full statement of the Standard Terms and the exclusive rights and remedies thereunder, please visit Mini-Circuits' website at www.minicircuits.com/MCLStore/terms.jsp

*Typical Performance Data*

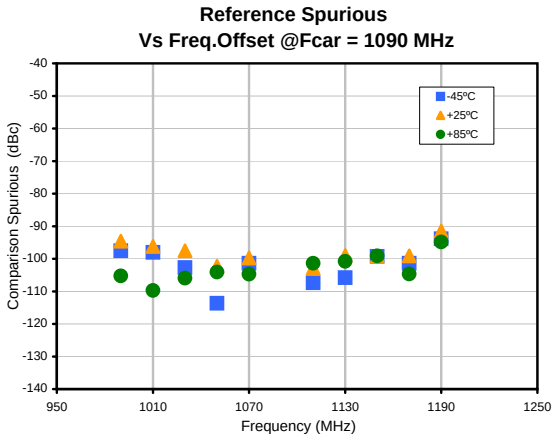


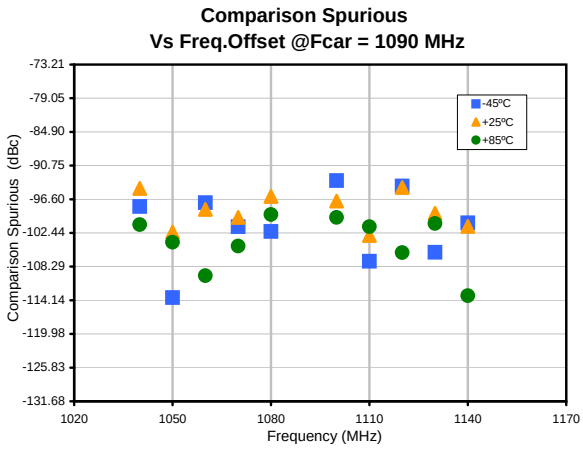


Notes
A. Performance and quality attributes and conditions not expressly stated in this specification document are intended to be excluded and do not form a part of this specification document.
B. Electrical specifications and performance data contained in this specification document are based on Mini-Circuit's applicable established test performance criteria and measurement instructions.
C. The parts covered by this specification document are subject to Mini-Circuits standard limited warranty and terms and conditions (collectively, "Standard Terms"); Purchasers of this part are entitled to the rights and benefits contained therein. For a full statement of the Standard Terms and the exclusive rights and remedies thereunder, please visit Mini-Circuits' website at www.minicircuits.com/MCLStore/terms.jsp

# Case Style DK

## Outline Dimensions

**DK1171**

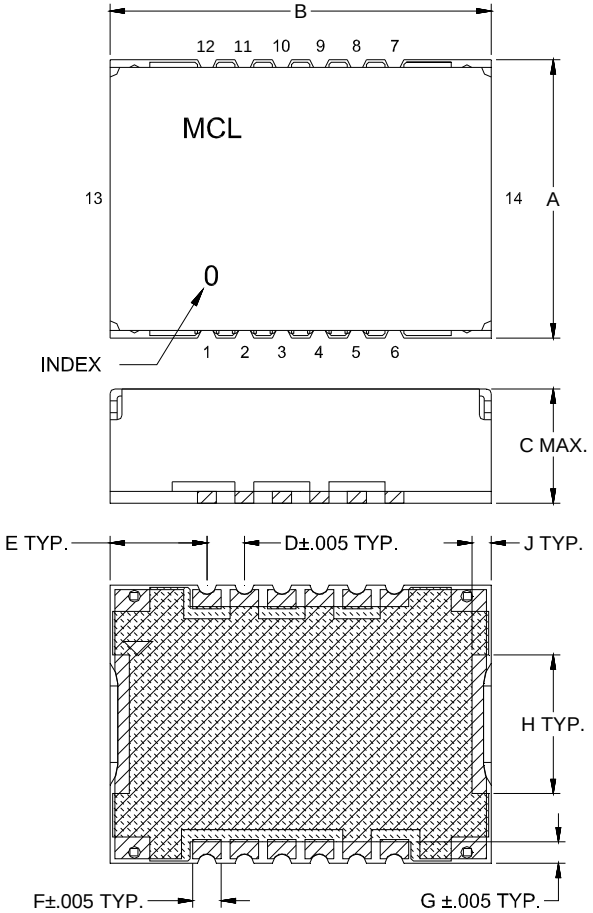


## Suggested PCB Land Pattern

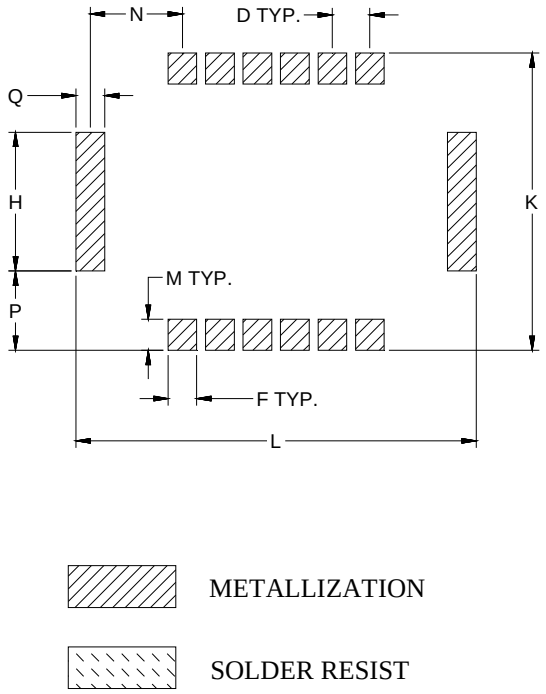


| CASE# | A | B | C | D | E | F | G | H | J | K | L | M | N | P | Q | WT. GRAM |
|---|---|---|---|---|---|---|---|---|---|---|---|---|---|---|---|---|
| DK1171 | .584 (14.83) | .800 (20.32) | .240 (6.10) | .079 (2.01) | .203 (5.16) | .060 (1.52) | .045 (1.14) | .291 (7.39) | .039 (1.0) | .624 (15.85) | .840 (21.34) | .065 (1.65) | .193 (4.90) | .170 (4.32) | .060 (1.52) | 2.5 |

**Dimensions are in inches (mm). Tolerances: 2PL. +/- .03; 3PL. +/- .015**

**Notes:**

1. Case material: Nickel-Silver alloy.
2. Base: Printed wiring laminate.
3. Termination finish:
   For RoHS Case Styles: 2-5 µ inch (.05-.13 microns) Gold over 120-240 µ inch (3.05-6.10 microns) Nickel plate. All models, (+) suffix.


Mini-Circuits®
INTERNET http://www.minicircuits.com
P.O. Box 350166, Brooklyn, New York 11235-0003 (718) 934-4500 Fax (718) 332-4661
Distribution Centers NORTH AMERICA 800-654-7949 • 417-335-5935 • Fax 417-335-5945 • EUROPE 44-1252-832600 • Fax 44-1252-837010



Mini-Circuits ISO 9001 & ISO 14001 Certified





This document and its contents are the property of Mini-Circuits

# Tape & Reel Packaging TR-F28

DEVICE ORIENTATION IN T&R

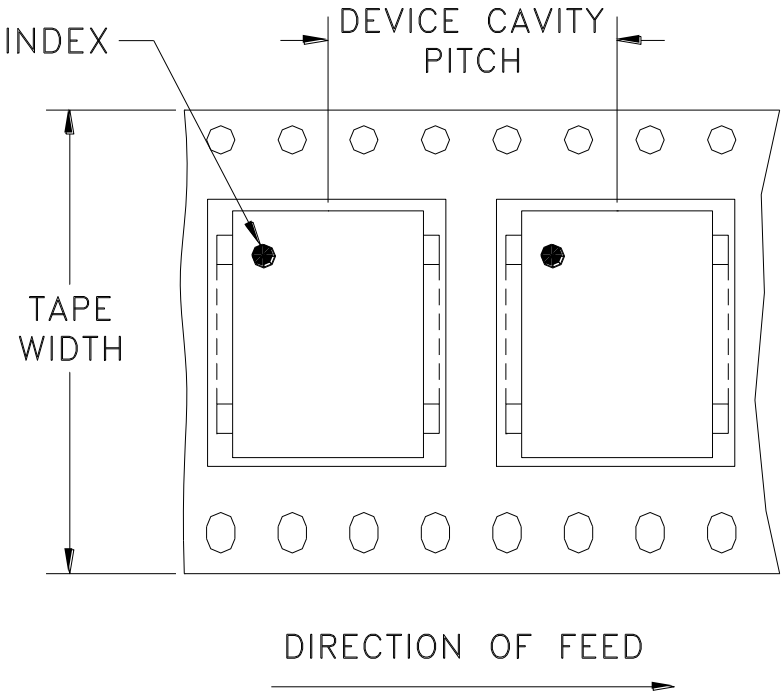


| Tape Width, mm | Device Cavity Pitch, mm | Reel Size, inches | Devices per Reel | |
|---|---|---|---|---|
| 32 | 20 | 13 | Small quantity standards (see note) | 20 |
| | | | | 50 |
| | | | | 100 |
| | | | | 200 |
| | | | Standard | 500 |

Note: Please consult individual model data sheet to determine device per reel availability.

Mini-Circuits carrier tape materials provide protection from ESD (Electro-Static Discharge) during handling and transportation. Tapes are static dissipative and comply with industry standards EIA-481/EIA-541.

Go to: www.minicircuits.com/pages/pdfs/tape.pdf

Mini-Circuits®
INTERNET http://www.minicircuits.com
P.O. Box 350166, Brooklyn, New York 11235-0003 (718) 934-4500 Fax (718) 332-4661
Distribution Centers NORTH AMERICA 800-654-7949 • 417-335-5935 • Fax 417-335-5945 • EUROPE 44-1252-832600 • Fax 44-1252-837010
Mini-Circuits ISO 9001 & ISO 14001 Certified


This document and its contents are the property of Mini-Circuits.

THIRD ANGLE PROJECTION

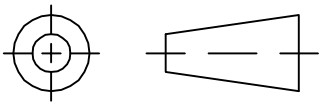

REVISIONS

| REV | ECN No. | DESCRIPTION | DATE | DR | AUTH |
|---|---|---|---|---|---|
| OR | M108069 | NEW RELEASE | 11/06 | DK | HH |
| A | M110535 | MODIFY GROUND PADS | 03/07 | DK | HH |
| B | M126537 | DELETE CHIP COMP. & TABLE OF VALUES | 03/10 | DK | HH |
| B | R78979 | DELETE CHIP COMP. & TABLE OF VALUES | 03/10 | DK | HH |

SUGGESTED MOUNTING CONFIGURATION
FOR DK801/DK1042 CASE STYLE, rs PIN CONNECTION, 50 Ω.

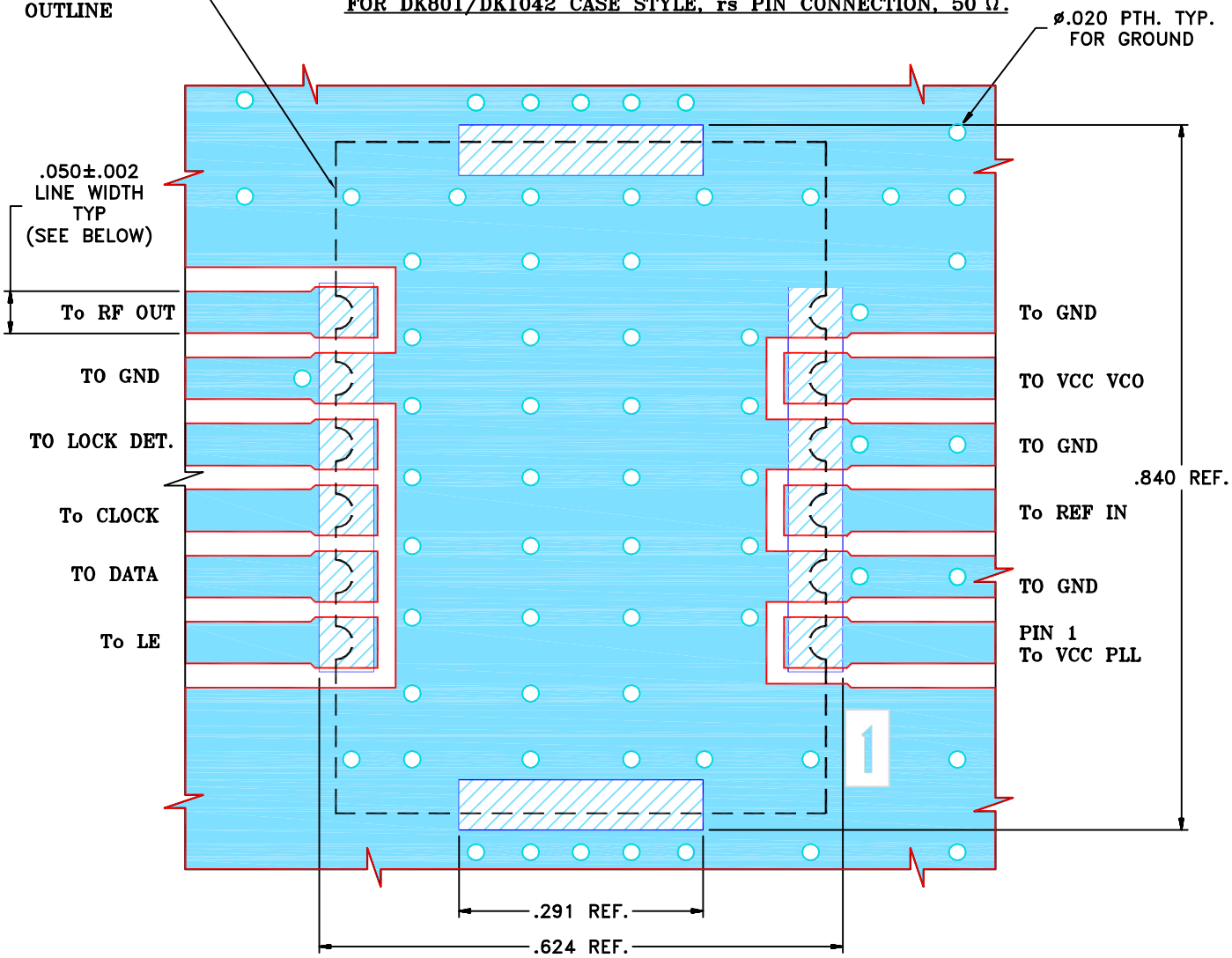


NOTES:

1. TRACE WIDTH IS SHOWN FOR FR4 WITH DIELECTRIC THICKNESS. .025"±.002". COPPER: 1/2 OZ. EACH SIDE. FOR OTHER MATERIALS TRACE WIDTH MAY NEED TO BE MODIFIED.
2. BOTTOM SIDE OF THE PCB IS CONTINUOUS GROUND PLANE.

DENOTES PCB COPPER LAYOUT WITH SMOBC (SOLDER MASK OVER BARE COPPER)

DENOTES COPPER LAND PATTERN FREE OF SOLDERMASK

| UNLESS OTHERWISE SPECIFIED | | INITIALS | DATE |
|---|---|---|---|
| DIMENSIONS ARE IN INCHES | DRAWN | DK (RAVON) | 27 MAR 07 |
| TOLERANCES ON: | CHECKED | RZ (RAVON) | 27 MAR 07 |
| 2 PL DECIMALS ± | APPROVED | HH (RAVON) | 27 MAR 07 |
| 3 PL DECIMALS ± .005 | | | |
| ANGLES ± | | | |
| FRACTIONS ± | | | |

Mini-Circuits®

THIS DOCUMENT AND ITS CONTENTS ARE THE PROPERTY OF MINI-CIRCUITS. EXCEPT FOR USE EXPRESSLY GRANTED, IN WRITING, TO ITS VENDORS, VENDEE AND THE UNITED STATES GOVERNMENT, MINI-CIRCUITS RESERVES ALL PROPRIETARY DESIGN, USE , MANUFACTURING AND REPRODUCTION RIGHTS THERETO. THESE CONTENTS SHALL NOT BE USED, DUPLICATED OR DISCLOSED TO ANY OUTSIDE PARTY, IN WHOLE OR IN PART, WITHOUT WRITTEN PERMISSION OF MINI-CIRCUITS.

ASHEETA1.DWG REV:A DATE:01/12/95

Mini-Circuits®
13 Neptune Avenue
Brooklyn NY 11235

PL, rs ,DK801/DK1042, KSN
TB-567+ (50 Ω )

| SIZE | CODE IDENT | DRAWING NO: | REV: |
|---|---|---|---|
| A | 15542 | 98-PL-249 | B |

| FILE: | SCALE: | SHEET: |
|---|---|---|
| 98PL249 | 5:1 | 1 OF 1 |

# ELECTRICAL SCHEME-GENERAL
# (TB for KSN)

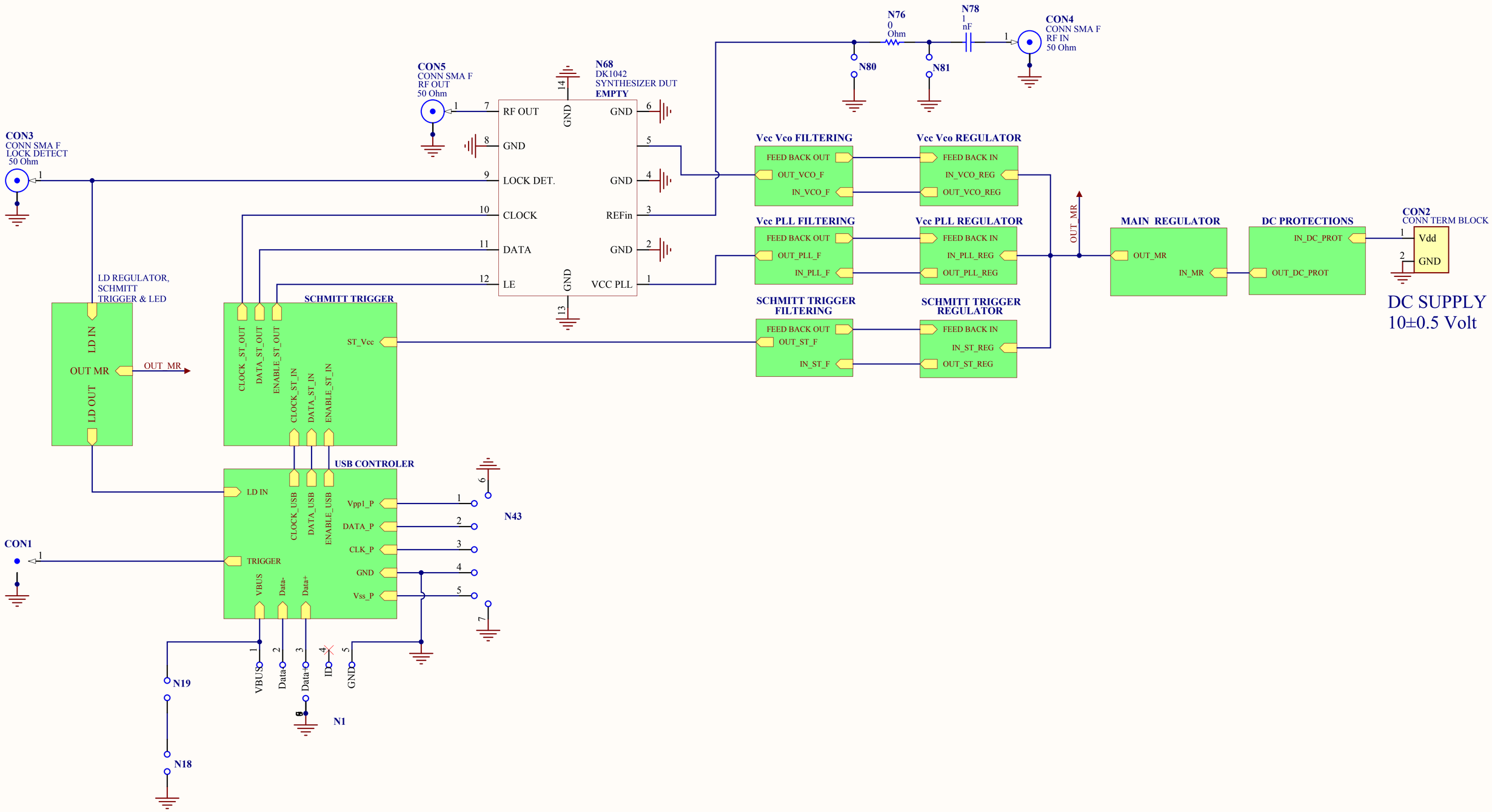


DWG NO: TB-567-1+F

REV: A

THIS DOCUMENT AND ITS CONTENTS ARE THE PROPERTY OF MINI-CIRCUITS.

# DC PROTECTIONS

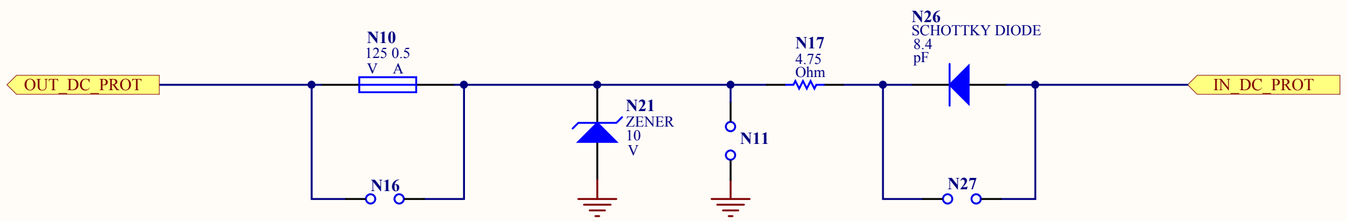



THIS DOCUMENT AND ITS CONTENTS ARE THE PROPERTY OF MINI-CIRCUITS.

# MAIN REGULATOR

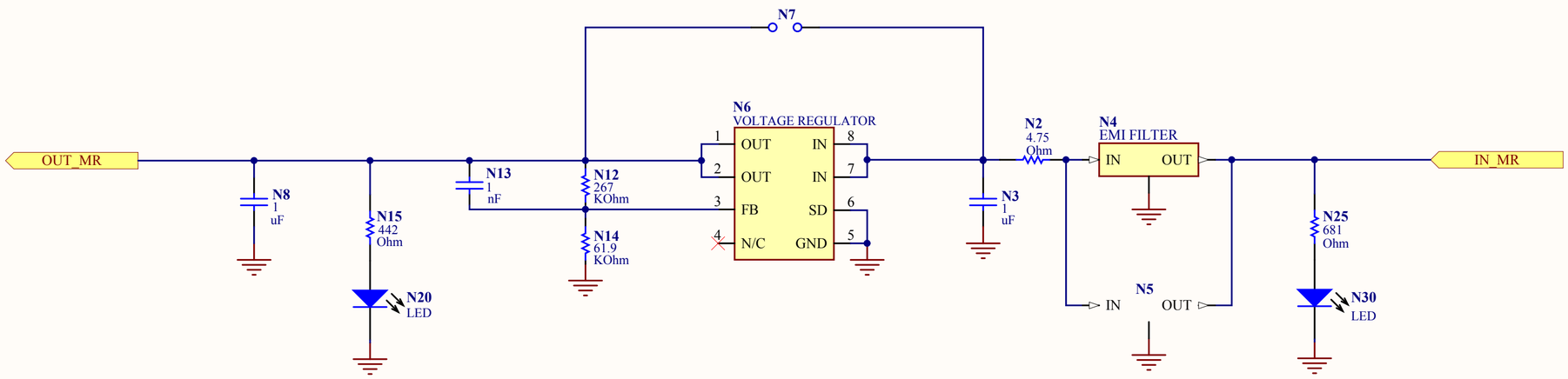





THIS DOCUMENT AND ITS CONTENTS ARE THE PROPERTY OF MINI-CIRCUITS.

# VCC PLL REGULATOR

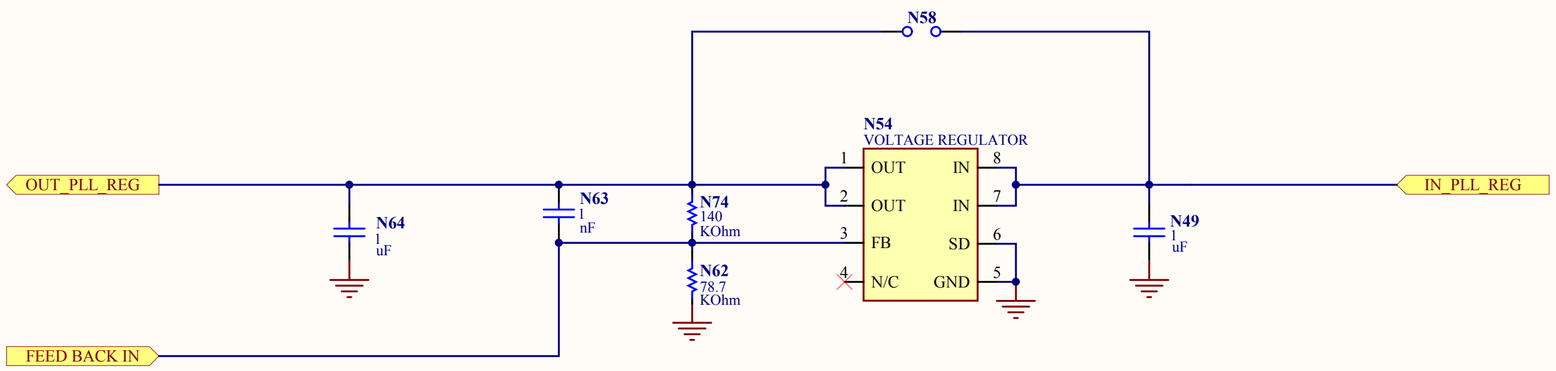


DWG NO: TB-567-1+F

REV: A

THIS DOCUMENT AND ITS CONTENTS ARE THE PROPERTY OF MINI-CIRCUITS.

# SCHMITT TRIGGER REGULATOR

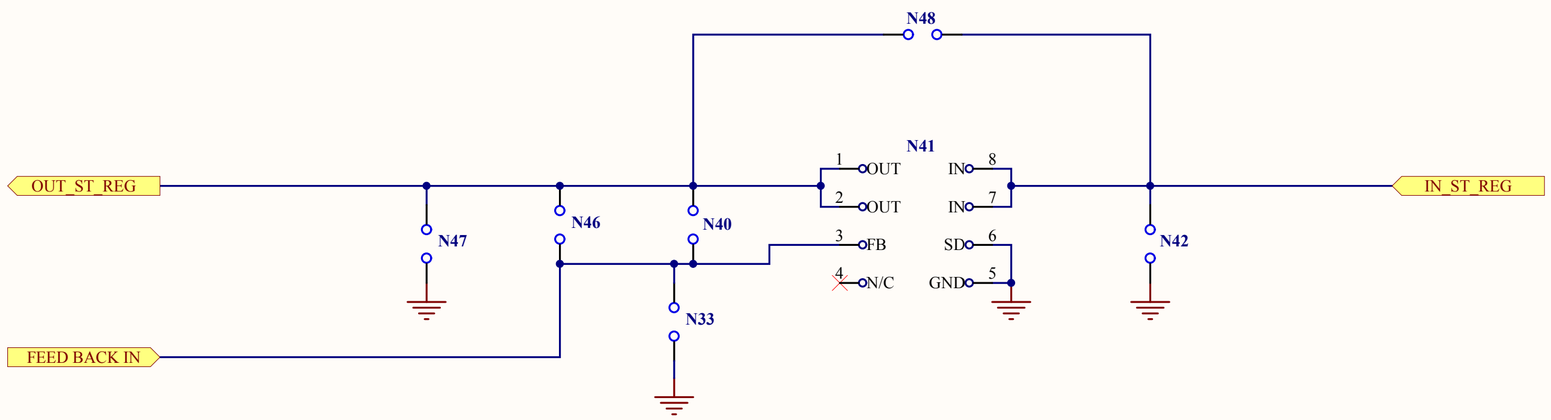





THIS DOCUMENT AND ITS CONTENTS ARE THE PROPERTY OF MINI-CIRCUITS.

# VCC VCO FILTERING

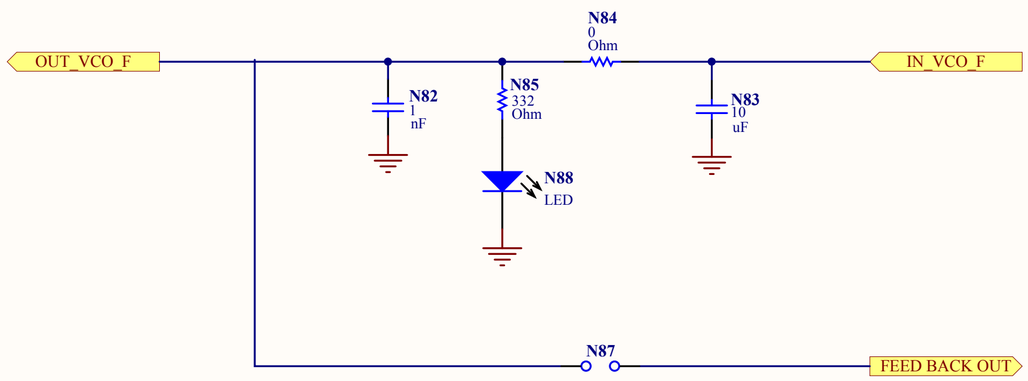



THIS DOCUMENT AND ITS CONTENTS ARE THE PROPERTY OF MINI-CIRCUITS.

# VCC PLL FILTERING

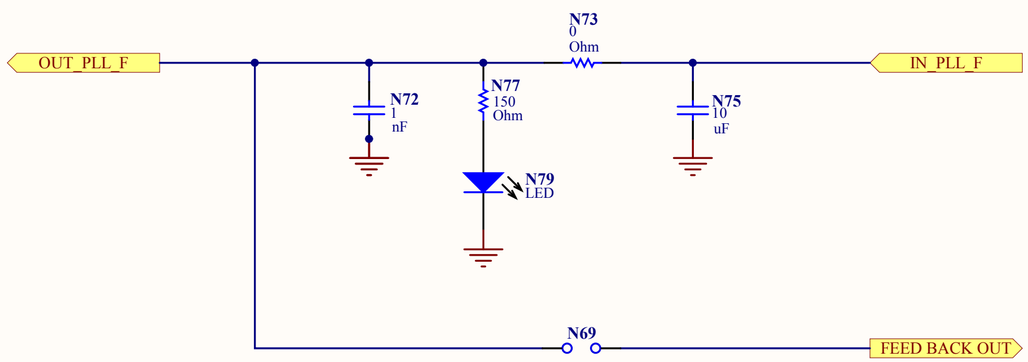



THIS DOCUMENT AND ITS CONTENTS ARE THE PROPERTY OF MINI-CIRCUITS.

# SCHMITT TRIGGER FILTERING

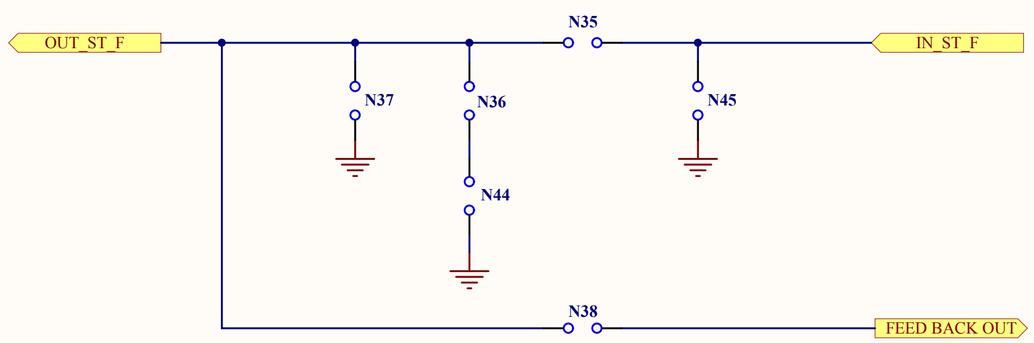



THIS DOCUMENT AND ITS CONTENTS ARE THE PROPERTY OF MINI-CIRCUITS.

# SCHMITT TRIGGER

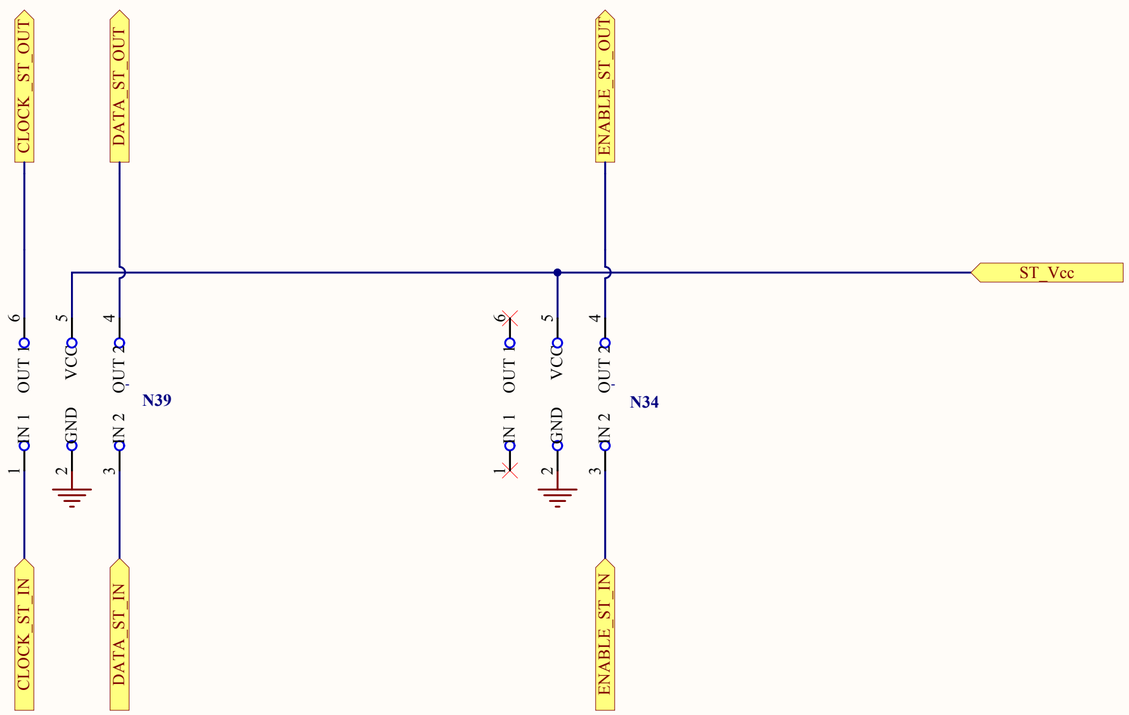


DWG NO: TB-567-1+F

REV: A

THIS DOCUMENT AND ITS CONTENTS ARE THE PROPERTY OF MINI-CIRCUITS.

# USB CONTROLER

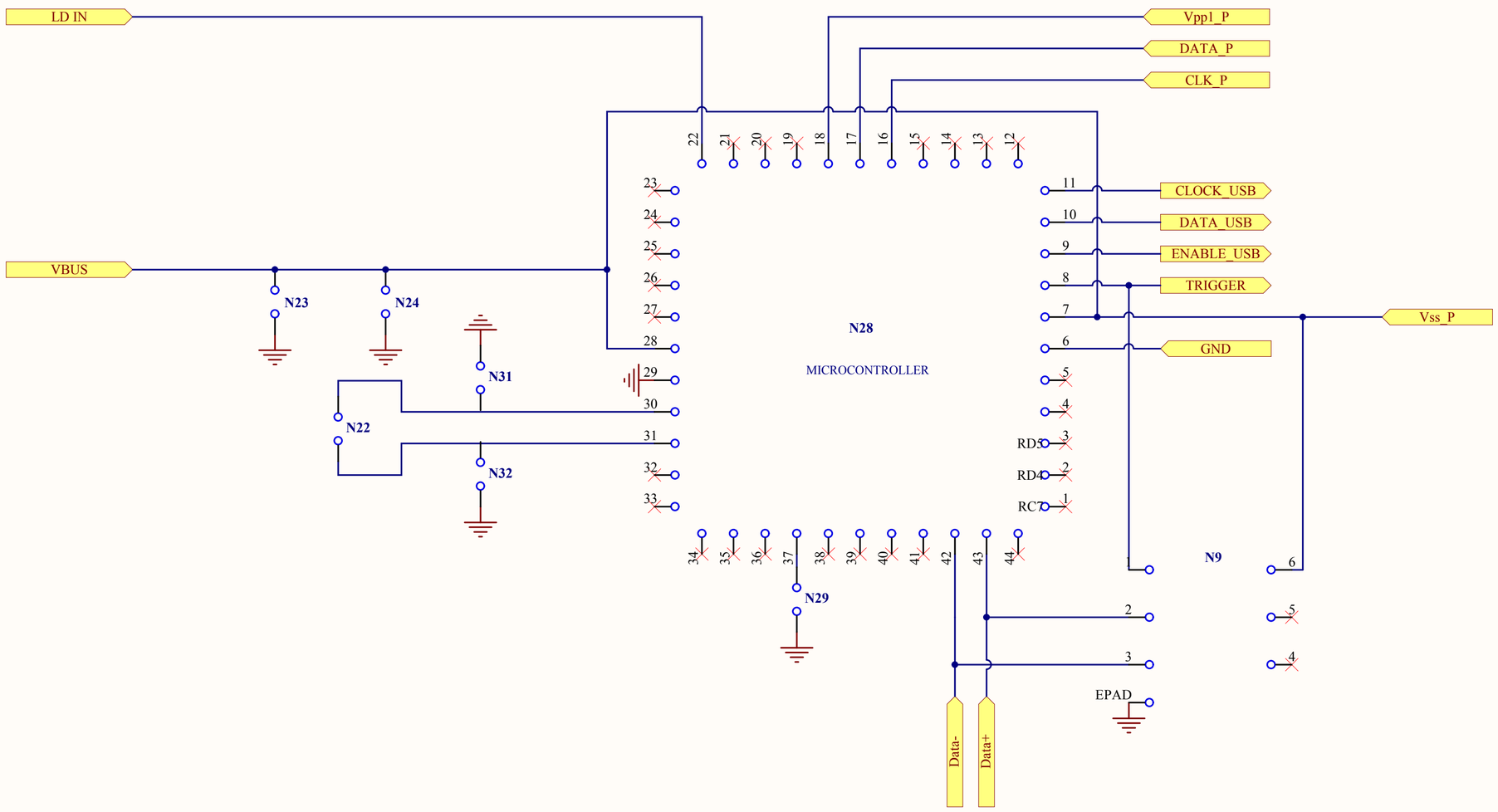


DWG NO: TB-567-1+F

REV: A

THIS DOCUMENT AND ITS CONTENTS ARE THE PROPERTY OF MINI-CIRCUITS.

# LD REGULATOR  SCHMITT TRIGGER AND LED

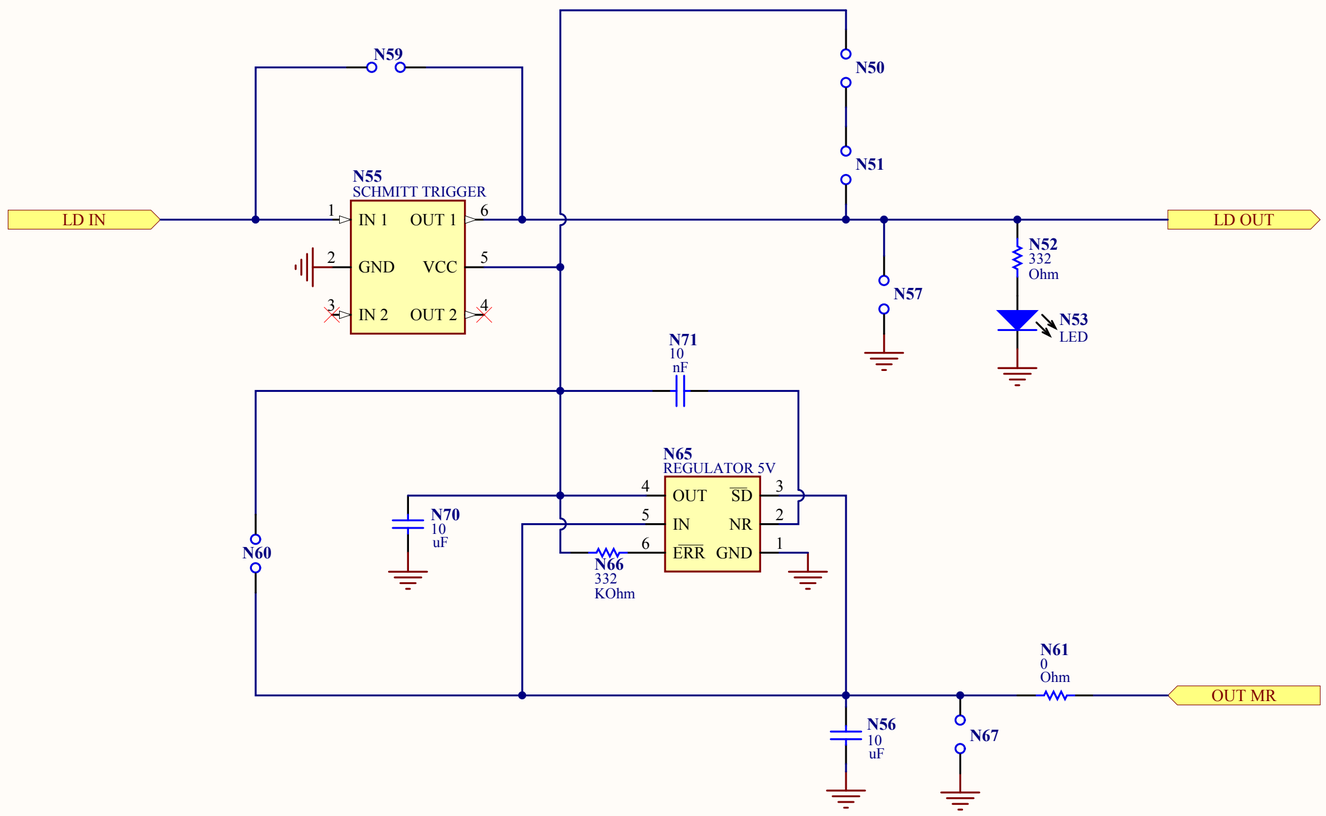


DWG NO: TB-567-1+F

REV: A

THIS DOCUMENT AND ITS CONTENTS ARE THE PROPERTY OF MINI-CIRCUITS.

# VCC VCO REGULATOR

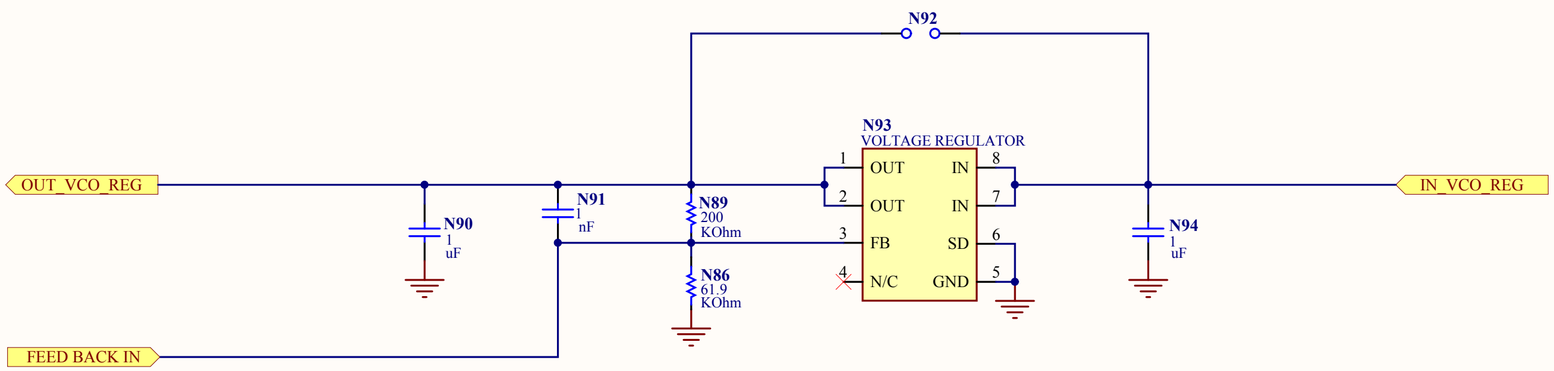

# Evaluation Board and Circuit

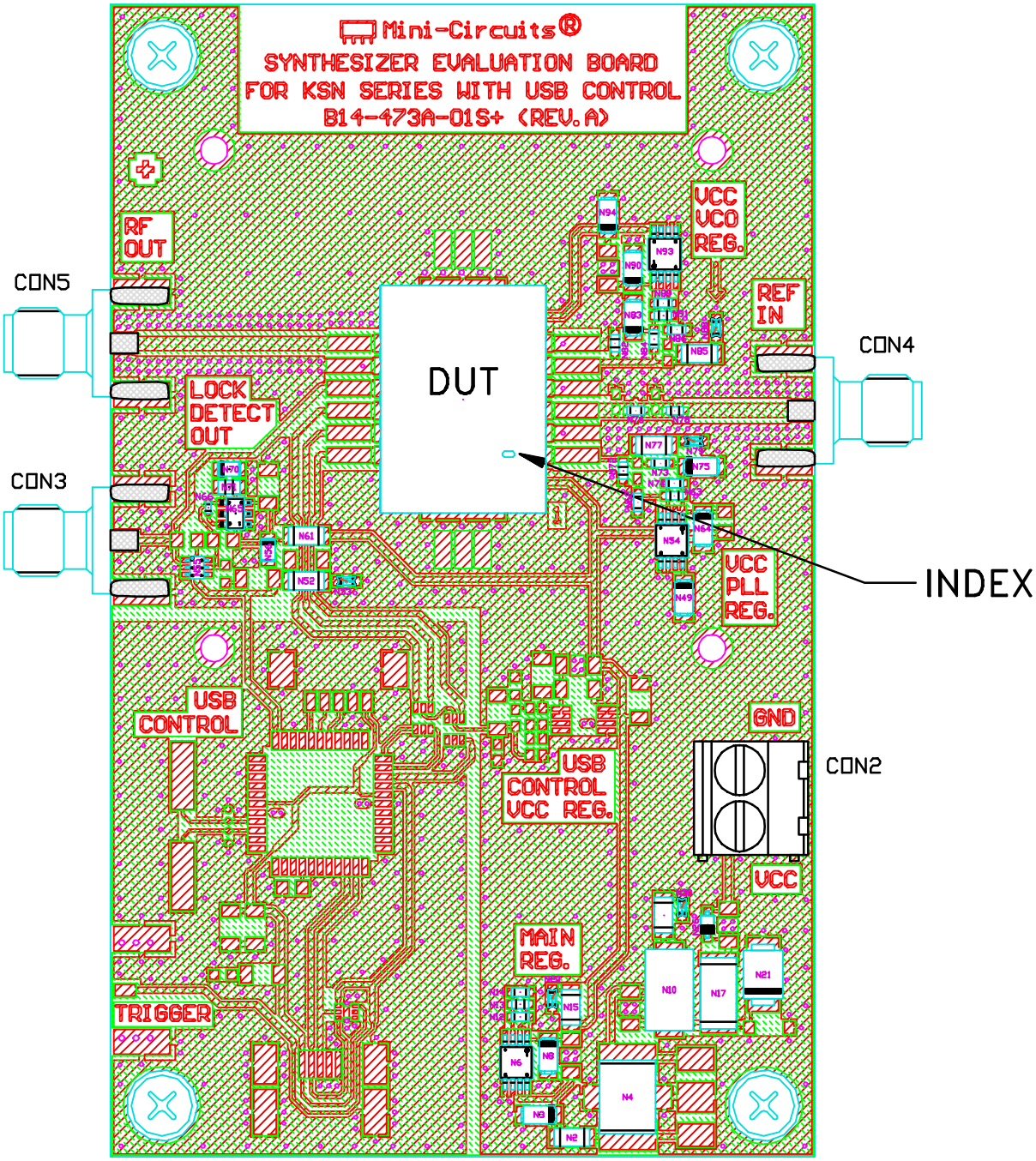


TB-567-1+F

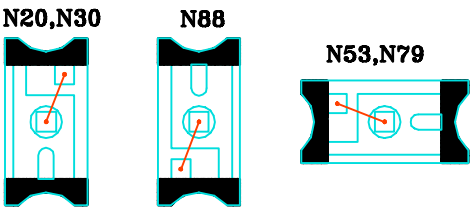


NOTES:

1. SMA F JACK CONNECTORS.
2. PCB MATERIAL: FR4 OR EQUIVALENT, DIALECTRIC CONSTANT=4.7, DIALECTRIC THICKNESS=.059 INCH.


THIS DOCUMENT AND ITS CONTENTS ARE THE PROPERTY OF MINI-CIRCUITS.

Mini-Circuits

# Environmental Specifications ENV65T1

All Mini-Circuits products are manufactured under exacting quality assurance and control standards, and are capable of meeting published specifications after being subjected to any or all of the following physical and environmental test.

| Specification | Test/Inspection Condition | Reference/Spec |
|---|---|---|
| Operating Temperature | -45° to 85°C<br>Ambient Environment | Individual Model Data Sheet |
| Storage Temperature | -55° to 100° C<br>Ambient Environment | Individual Model Data Sheet |
| Humidity | 90 to 95% RH, 240 hours, 50°C | MIL-STD-202, Method 103, Condition A, Except 50°C and end-point electrical test done within 12 hours |
| Thermal Shock | -55° to 100°C, 100 cycles | MIL-STD-202, Method 107, Condition A-3, except +100°C |
| Solder Reflow Heat | Sn-Pb Eutectic Process: 225°C peak<br>Pb-Free Process, 245°C peak | J-STD-020, Table 4-1, 4-2 and 5-2, Figure 5-1 |
| Solderability | 10X Magnification | J-STD-002, Para 4.2.5, Test S, 95% Coverage |
| Vibration (High Frequency) | 20g peak, 20-2000 Hz, 4 times in each of three axes (total 12) | MIL-STD-883, Method 2007.3, Condition A |
| Mechanical Shock | 50g, 11 ms, 1/2-sine, 18 shocks: 3 each direction, each of 3 axes | MIL-STD-202, Method 213, Condition A |
| Marking Resistance to Solvents | Isopropyl alcohol + mineral spirits at 25°C; terpene defluxer at 25°C;<br>distilled water + proylene glycol monomethyl ether + monoethanolamine at 63°C to 70°C | MIL-STD-202, Method 215 |


This document and its contents are the property of Mini-Circuits.