Engineering Development Model

Frequency Synthesizer KSN-EDR97331MP

Important Note

This model has been designed, built and tested in our engineering department. Performance data represents model capability.
At present it is a non-catalog model. On request, we can supply a final specification sheet, part number and price/delivery information.

Please click "Back", and then click "Contact Us" for Applications support.

CASE STYLE : DK1042

Not recommended for new designs. Contact applications and/or your account manager for an alternative.

ELECTRICAL SPECIFICATIONS 50Ω, over -40°C to +70°C				
Parameter	**Min.**	**Typ.**	**Max.**	**Units**
Frequency	3000		3500	MHz
Step size		1000		kHz
Settling Time Within ±1kHz		400		µsec
Output Power	-1	+4	+8	dBm
Phase Noise				
at 100 Hz offset		-81		dBc/Hz
at 1 kHz offset		-90		dBc/Hz
at 10 KHz offset		-96		dBc/Hz
at 100 KHz offset		-96	-90	dBc/Hz
at 1000 kHz offset		-126		dBc/Hz
Integrated SSB Phase Noise		-43		dBc
Ref & Comp Spurious Suppression		-101		dBc
0.5 Step size Spurious Suppression		-63		dBc
Non-Harm. Spurious Suppression		-90		dBc
Harmonic Suppression		-38		dBc
Supply voltage VCO		7		V
Supply voltage PLL		3		V
Supply current VCO		40	50	V
Supply current PLL		13	22	V
Reference In (External) Frequency		10		MHz
Reference In (External) Amplitude		1		Vp-p
Reference In (External) Impedance		100		kΩ
Reference In (External) Ph. N @ 1kHz		-145		dBc/Hz
Input Logic Levels Logic high	1.4		3	V
Input Logic Levels Logic Low			0.6	
Digital Lock Detect Locked	1.4		3	V
Digital Lock Detect Unlocked			0.4	
Frequency Synthesizer PLL	ADF4153			

ABSOLUTE MAXIMUM RATINGS	
Operating Temperature	-45°C to 85°C
Storage Temperature	-55°C to 100°C
VCO Supply Voltage	8V
PLL Supply Voltage	4V
Reference Frequency voltage	3.6Vp-p
Data, Clock & LE levels	3.3V

Power On sequence: Vcc VCO followed by Vcc PLL
Power Off sequence: Vcc PLL followed by Vcc VCO

PIN CONNECTIONS			
RF OUT	7	**CLOCK**	10
VCC VCO	5	**DATA**	11
VCC PLL	1	**LATCH ENABLE**	12
REF IN	3	**GROUND**	2,4,6,8,13,14
LOCK DETECT	9		

Notes
A. Performance and quality attributes and conditions not expressly stated in this specification document are intended to be excluded and do not form a part of this specification document.
B. Electrical specifications and performance data contained in this specification document are based on Mini-Circuit's applicable established test performance criteria and measurement instructions.
C. The parts covered by this specification document are subject to Mini-Circuits standard limited warranty and terms and conditions (collectively, "Standard Terms"); Purchasers of this part are entitled to the rights and benefits contained therein. For a full statement of the Standard Terms and the exclusive rights and remedies thereunder, please visit Mini-Circuits' website at www.minicircuits.com/MCLStore/terms.jsp

Frequency Synthesizer KSN-EDR9733/1MP

Typical Performance Data

FREQ. (MHz)	POWER OUTPUT (dBm)			HARMONICS (dBc)						VCO CURRENT (mA)			PLL CURRENT (mA)		
				F2			F3								
	-40 °C	+25ºC	+70 °C	-40 °C	+25ºC	+70 °C	-40 °C	+25ºC	+70 °C	-40 °C	+25ºC	+70 °C	-40 °C	+25ºC	+70 °C
2950	3.15	3.55	3.51	-50.09	-52.85	-52.14	-35.76	-38.37	-40.03	34.83	38.80	43.94	13.82	13.56	15.47
3000	3.53	3.86	3.76	-46.05	-48.44	-47.90	-36.23	-38.51	-41.01	34.83	38.87	44.02	13.82	13.61	15.48
3010	3.58	3.90	3.82	-50.73	-49.75	-47.97	-37.45	-39.63	-42.14	34.82	38.88	43.89	13.81	13.62	15.47
3070	3.71	4.02	3.94	-50.63	-52.65	-51.41	-38.38	-40.96	-43.75	34.85	38.91	44.02	13.81	13.62	15.48
3130	3.80	4.11	4.03	-49.07	-49.10	-51.37	-41.03	-43.44	-45.07	34.87	38.90	43.90	13.81	13.64	15.47
3190	3.85	4.15	4.07	-49.83	-49.87	-47.84	-44.06	-43.79	-43.97	34.73	38.83	43.79	13.81	13.64	15.48
3250	3.92	4.09	3.98	-41.57	-43.14	-43.41	-44.23	-42.60	-42.29	34.69	38.70	43.62	13.81	13.64	15.48
3310	4.05	4.08	3.90	-41.97	-43.90	-45.14	-44.13	-43.18	-42.85	34.52	38.51	43.52	13.81	13.64	15.47
3370	3.80	3.80	3.63	-34.87	-37.52	-39.35	-42.61	-41.20	-41.01	34.26	38.29	43.17	13.81	13.64	15.47
3430	3.21	3.20	3.09	-33.43	-35.90	-37.75	-40.72	-40.27	-40.30	34.07	38.05	43.01	13.81	13.64	15.48
3490	2.95	2.87	2.75	-32.54	-34.81	-37.00	-42.44	-43.30	-43.17	33.78	37.82	42.76	13.81	13.64	15.48
3500	2.85	2.54	2.61	-33.12	-35.24	-37.26	-41.49	-42.47	-42.90	33.73	37.79	42.71	13.80	13.64	15.48
3550	2.63	2.30	2.22	-33.48	-36.24	-38.52	-42.31	-42.38	-42.24	33.62	37.61	42.47	13.81	13.64	15.48

FREQ. (MHz)	PHASE NOISE (dBc/Hz) @ OFFSETS														
	-40 °C					+25ºC					+70 °C				
	100Hz	1kHz	10kHz	100kHz	1MHz	100Hz	1kHz	10kHz	100kHz	1MHz	100Hz	1kHz	10kHz	100kHz	1MHz
2950	-80.66	-87.56	-96.62	-95.96	-125.11	-82.29	-89.99	-96.29	-95.39	-124.86	-81.30	-93.00	-96.50	-95.20	-123.57
3000	-78.72	-88.88	-96.83	-95.79	-125.09	-83.84	-90.81	-96.21	-95.39	-124.84	-84.12	-92.36	-96.56	-95.03	-123.52
3010	-78.95	-89.48	-96.24	-95.91	-125.16	-83.93	-90.84	-95.83	-95.43	-124.91	-82.90	-92.50	-96.54	-95.08	-123.75
3070	-80.35	-89.80	-96.46	-95.78	-125.14	-84.81	-90.52	-95.98	-95.39	-124.97	-83.85	-92.09	-96.45	-95.10	-123.60
3130	-78.77	-89.83	-96.35	-95.69	-124.87	-82.72	-90.05	-95.77	-95.22	-124.59	-81.58	-91.83	-96.08	-94.80	-123.27
3190	-78.46	-88.97	-95.81	-95.38	-124.66	-83.19	-89.14	-96.04	-94.94	-124.33	-82.44	-91.35	-96.03	-94.57	-123.01
3250	-78.41	-89.66	-96.35	-95.47	-124.52	-85.22	-90.27	-96.08	-94.98	-124.32	-82.24	-90.93	-95.98	-94.77	-123.48
3310	-78.65	-88.49	-95.90	-95.51	-125.37	-82.73	-90.27	-95.94	-95.38	-125.46	-79.14	-91.03	-95.98	-95.22	-124.56
3370	-77.44	-89.56	-96.12	-95.82	-125.46	-82.38	-88.42	-95.57	-95.58	-125.67	-80.08	-92.67	-95.58	-95.52	-124.79
3430	-78.91	-87.16	-95.30	-96.32	-126.03	-80.94	-88.45	-95.58	-96.29	-126.37	-80.23	-91.79	-95.92	-96.18	-125.52
3490	-77.51	-87.49	-94.74	-97.84	-127.44	-80.50	-90.93	-94.21	-97.21	-127.46	-78.55	-91.84	-94.81	-97.91	-126.97
3500	-78.47	-87.74	-95.29	-97.70	-127.21	-81.17	-89.31	-94.64	-97.39	-127.37	-79.44	-90.27	-95.53	-98.03	-127.09
3550	-77.69	-89.13	-94.71	-99.78	-128.56	-80.22	-88.89	-95.21	-99.95	-128.88	-79.38	-90.24	-95.26	-100.58	-128.54

Notes
A. Performance and quality attributes and conditions not expressly stated in this specification document are intended to be excluded and do not form a part of this specification document.
B. Electrical specifications and performance data contained in this specification document are based on Mini-Circuit's applicable established test performance criteria and measurement instructions.
C. The parts covered by this specification document are subject to Mini-Circuits standard limited warranty and terms and conditions (collectively, "Standard Terms"); Purchasers of this part are entitled to the rights and benefits contained therein. For a full statement of the Standard Terms and the exclusive rights and remedies thereunder, please visit Mini-Circuits' website at www.minicircuits.com/MCLStore/terms.jsp

Typical Performance Data

COMPARISON SPURIOUS ORDER	COMPARISON & REFERENCE SPURIOUS @Fcarrier 3001 MHz± (n*Fcomparison) (dBc) NOTE 1			COMPARISON & REFERENCE SPURIOUS @Fcarrier 3251 MHz± (n*Fcomparison) (dBc) NOTE 1			COMPARISON & REFERENCE SPURIOUS @Fcarrier 3499 MHz± (n*Fcomparison) (dBc) NOTE 1		
n	-40 °C	+25ºC	+70 °C	-40 °C	+25ºC	+70 °C	-40 °C	+25ºC	+70 °C
-5	-77.42	-111.42	-116.42	-111.71	-113.63	-115.14	-77.47	-115.33	-108.18
-4	-85.21	-109.02	-115.47	-108.35	-109.91	-111.94	-85.19	-112.25	-108.49
-3	-83.22	-102.72	-108.79	-115.30	-104.14	-102.51	-83.26	-106.29	-102.42
-2	-74.21	-104.39	-98.86	-107.11	-97.54	-95.56	-74.13	-102.85	-97.27
-1	-62.99	-77.35	-77.76	-79.84	-78.31	-78.54	-62.72	-84.26	-82.54
0 note 2	-	-	-	-	-	-	-	-	-
+1	-60.64	-77.85	-78.11	-80.15	-78.76	-78.59	-60.51	-83.60	-83.03
+2	-73.77	-100.17	-98.51	-105.10	-98.19	-94.76	-73.80	-102.48	-99.13
+3	-83.29	-118.33	-116.67	-110.66	-104.55	-100.63	-83.39	-102.48	-106.06
+4	-82.26	-115.84	-116.05	-112.44	-110.79	-107.26	-82.41	-106.42	-114.22
+5	-77.15	-114.37	-114.40	-111.80	-105.39	-112.23	-77.17	-109.08	-114.54

Note 1: Comparison & Reference frequency 10 MHz
Note 2: All spurs are referenced to carrier signal (n=0).

Notes
A. Performance and quality attributes and conditions not expressly stated in this specification document are intended to be excluded and do not form a part of this specification document.
B. Electrical specifications and performance data contained in this specification document are based on Mini-Circuit's applicable established test performance criteria and measurement instructions.
C. The parts covered by this specification document are subject to Mini-Circuits standard limited warranty and terms and conditions (collectively, "Standard Terms"); Purchasers of this part are entitled to the rights and benefits contained therein. For a full statement of the Standard Terms and the exclusive rights and remedies thereunder, please visit Mini-Circuits' website at www.minicircuits.com/MCLStore/terms.jsp

Typical Performance Data

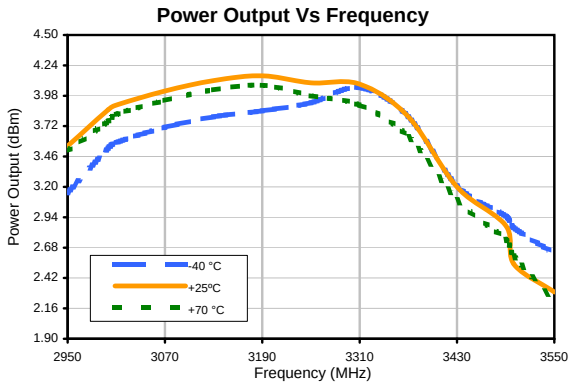

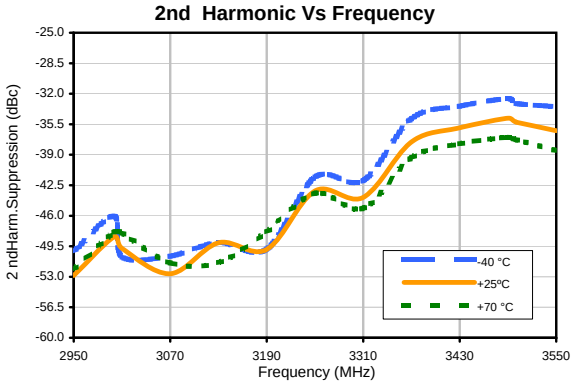

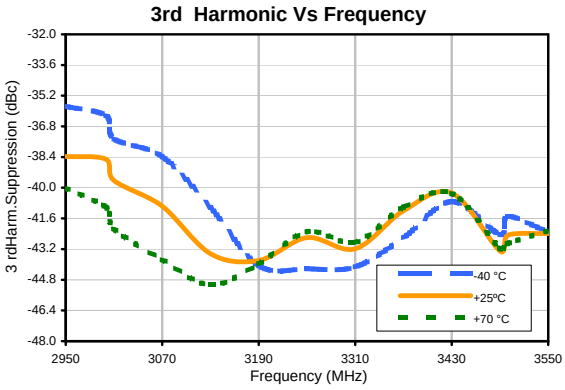

Notes
A. Performance and quality attributes and conditions not expressly stated in this specification document are intended to be excluded and do not form a part of this specification document.
B. Electrical specifications and performance data contained in this specification document are based on Mini-Circuit's applicable established test performance criteria and measurement instructions.
C. The parts covered by this specification document are subject to Mini-Circuits standard limited warranty and terms and conditions (collectively, "Standard Terms"); Purchasers of this part are entitled to the rights and benefits contained therein. For a full statement of the Standard Terms and the exclusive rights and remedies thereunder, please visit Mini-Circuits' website at www.minicircuits.com/MCLStore/terms.jsp

Typical Performance Data

Phase Noise @ 100 Hz offset

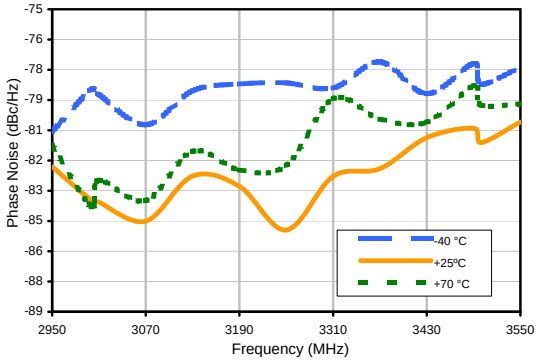

Phase Noise @ 1 kHz offset

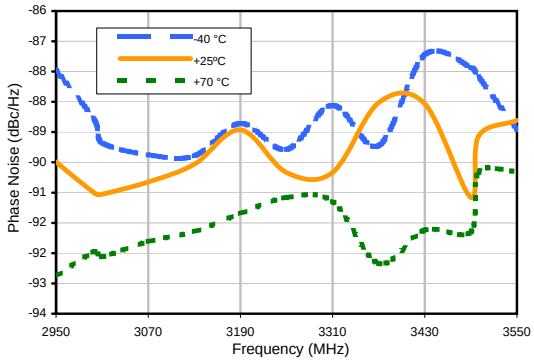

Phase Noise @ 10 kHz offset

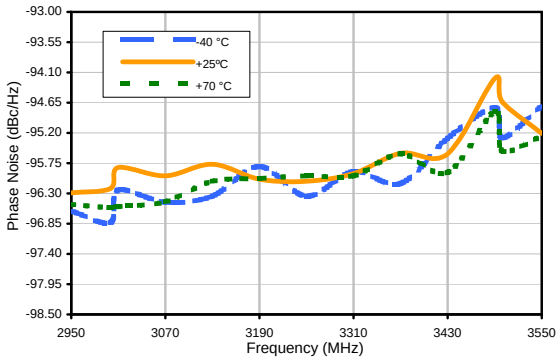

Phase Noise @ 100 kHz offset

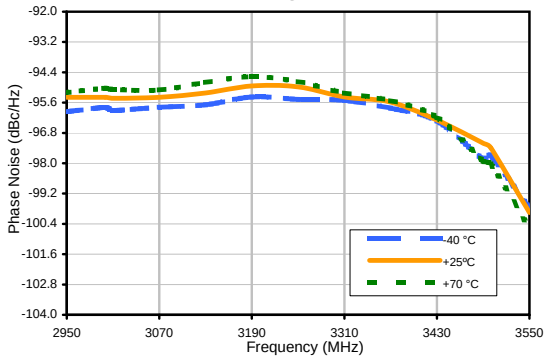

Phase Noise @ 1 MHz offset

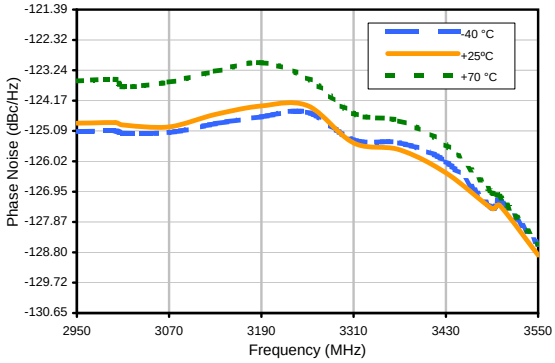

Notes
A. Performance and quality attributes and conditions not expressly stated in this specification document are intended to be excluded and do not form a part of this specification document.
B. Electrical specifications and performance data contained in this specification document are based on Mini-Circuit's applicable established test performance criteria and measurement instructions.
C. The parts covered by this specification document are subject to Mini-Circuits standard limited warranty and terms and conditions (collectively, "Standard Terms"); Purchasers of this part are entitled to the rights and benefits contained therein. For a full statement of the Standard Terms and the exclusive rights and remedies thereunder, please visit Mini-Circuits' website at www.minicircuits.com/MCLStore/terms.jsp

Typical Performance Data

Comparison & Reference Spurious
Vs Freq.Offset @Fcar = 3001 MHz

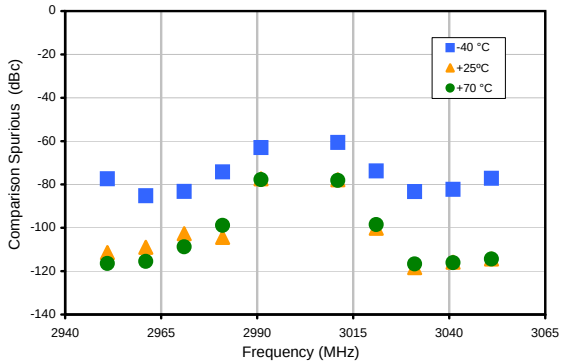

Comparison & Reference Spurious
Vs Freq.Offset @Fcar = 3251 MHz

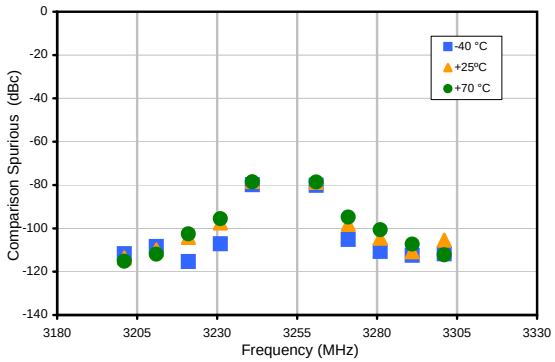

Comparison & Reference Spurious
Vs Freq.Offset @Fcar = 3499 MHz

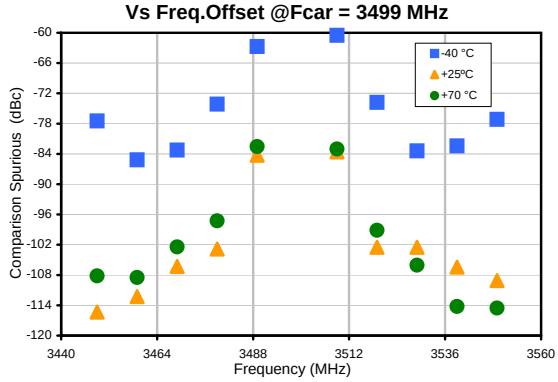

Notes
A. Performance and quality attributes and conditions not expressly stated in this specification document are intended to be excluded and do not form a part of this specification document.
B. Electrical specifications and performance data contained in this specification document are based on Mini-Circuit's applicable established test performance criteria and measurement instructions.
C. The parts covered by this specification document are subject to Mini-Circuits standard limited warranty and terms and conditions (collectively, "Standard Terms"); Purchasers of this part are entitled to the rights and benefits contained therein. For a full statement of the Standard Terms and the exclusive rights and remedies thereunder, please visit Mini-Circuits' website at www.minicircuits.com/MCLStore/terms.jsp

Mini-Circuits®
www.minicircuits.com P.O. Box 350166, Brooklyn, NY 11235-0003 (718) 934-4500 sales@minicircuits.com

Case Style DK

DK1042

Outline Dimensions

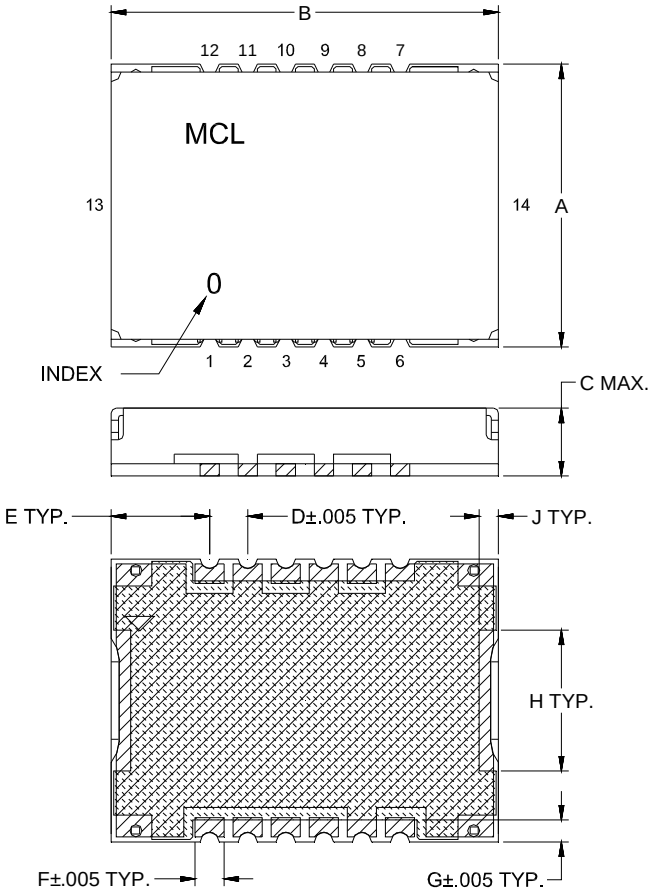

Suggested PCB Land Pattern

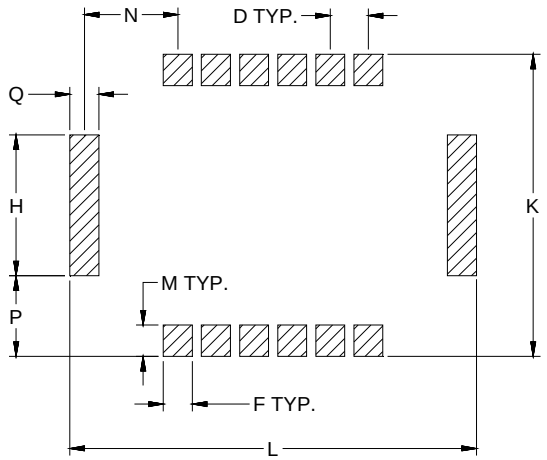

METALLIZATION

SOLDER RESIST

CASE#	A	B	C	D	E	F	G	H	J	K	L	M	N	P	Q	WT. GRAM
DK1042	.584 (14.83)	.800 (20.32)	.154 (3.91)	.079 (2.01)	.203 (5.16)	.060 (1.52)	.045 (1.14)	.291 (7.39)	.039 (1.0)	.624 (15.85)	.840 (21.34)	.065 (1.65)	.193 (4.90)	.170 (4.32)	.060 (1.52)	1.6

Dimensions are in inches (mm). Tolerances: 2PL. +/- .03; 3PL. +/- .015

Notes:

1. Case material: Nickel-Silver alloy.
2. Base: Printed wiring laminate.
3. Termination finish:

For RoHS Case Styles: 2-5 µ inch (.05-.13 microns) Gold over 120-240 µ inch (3.05-6.10 microns) Nickel plate. All models, (+) suffix.

This document and its contents are the property of Mini-Circuits

Tape & Reel Packaging TR-F28

DEVICE ORIENTATION IN T&R

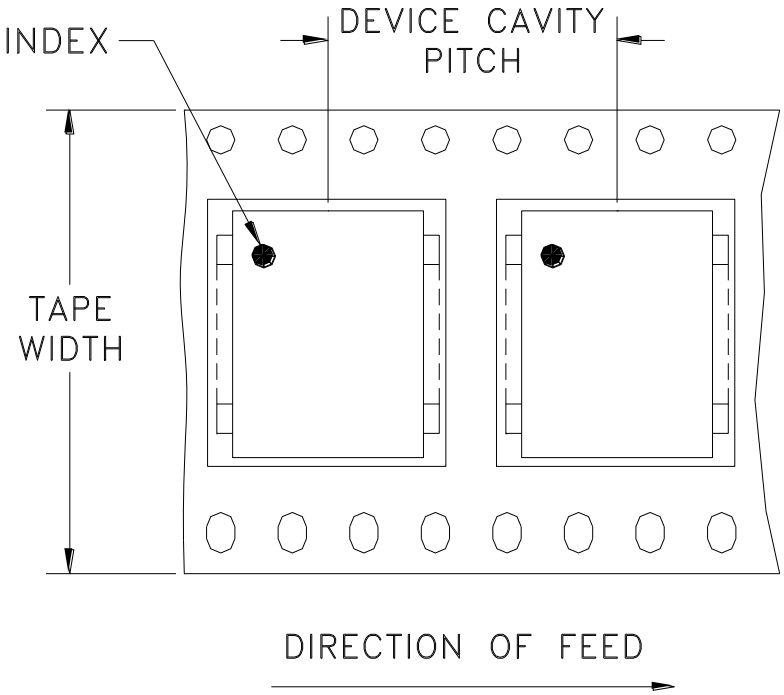

Tape Width, mm	Device Cavity Pitch, mm	Reel Size, inches	Devices per Reel	
32	20	13	Small quantity standards (see note)	20
				50
				100
				200
			Standard	500

Note: Please consult individual model data sheet to determine device per reel availability.

Mini-Circuits carrier tape materials provide protection from ESD (Electro-Static Discharge) during handling and transportation. Tapes are static dissipative and comply with industry standards EIA-481/EIA-541.

Go to: www.minicircuits.com/pages/pdfs/tape.pdf

Mini-Circuits®
INTERNET http://www.minicircuits.com
P.O. Box 350166, Brooklyn, New York 11235-0003 (718) 934-4500 Fax (718) 332-4661
Distribution Centers NORTH AMERICA 800-654-7949 • 417-335-5935 • Fax 417-335-5945 • EUROPE 44-1252-832600 • Fax 44-1252-837010
Mini-Circuits ISO 9001 & ISO 14001 Certified

This document and its contents are the property of Mini-Circuits.

THIRD ANGLE PROJECTION

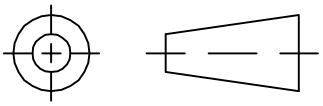

REVISIONS

REV	ECN No.	DESCRIPTION	DATE	DR	AUTH
OR	M108069	NEW RELEASE	11/06	DK	HH
A	M110535	MODIFY GROUND PADS	03/07	DK	HH
B	M126537	DELETE CHIP COMP. & TABLE OF VALUES	03/10	DK	HH
B	R78979	DELETE CHIP COMP. & TABLE OF VALUES	03/10	DK	HH

SUGGESTED MOUNTING CONFIGURATION
FOR DK801/DK1042 CASE STYLE, rs PIN CONNECTION, 50 Ω.

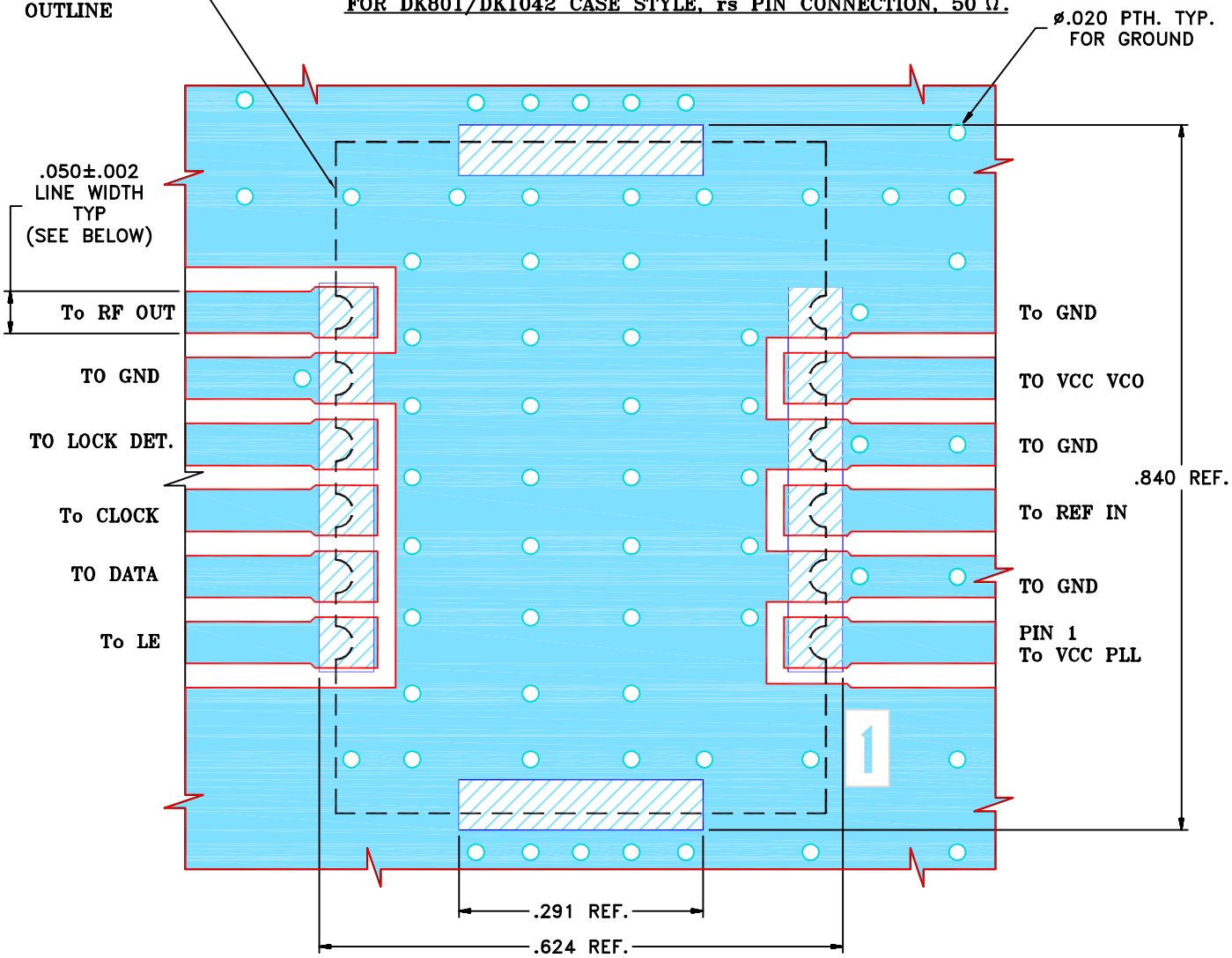

NOTES:

1. TRACE WIDTH IS SHOWN FOR FR4 WITH DIELECTRIC THICKNESS. .025"±.002". COPPER: 1/2 OZ. EACH SIDE. FOR OTHER MATERIALS TRACE WIDTH MAY NEED TO BE MODIFIED.
2. BOTTOM SIDE OF THE PCB IS CONTINUOUS GROUND PLANE.

DENOTES PCB COPPER LAYOUT WITH SMOBC (SOLDER MASK OVER BARE COPPER)

DENOTES COPPER LAND PATTERN FREE OF SOLDERMASK

UNLESS OTHERWISE SPECIFIED		INITIALS	DATE
DIMENSIONS ARE IN INCHES	DRAWN	DK (RAVON)	27 MAR 07
TOLERANCES ON:	CHECKED	RZ (RAVON)	27 MAR 07
2 PL DECIMALS ±	APPROVED	HH (RAVON)	27 MAR 07
3 PL DECIMALS ± .005			
ANGLES ±			
FRACTIONS ±			

Mini-Circuits®

THIS DOCUMENT AND ITS CONTENTS ARE THE PROPERTY OF MINI-CIRCUITS. EXCEPT FOR USE EXPRESSLY GRANTED, IN WRITING, TO ITS VENDORS, VENDEE AND THE UNITED STATES GOVERNMENT, MINI-CIRCUITS RESERVES ALL PROPRIETARY DESIGN, USE , MANUFACTURING AND REPRODUCTION RIGHTS THERETO. THESE CONTENTS SHALL NOT BE USED, DUPLICATED OR DISCLOSED TO ANY OUTSIDE PARTY, IN WHOLE OR IN PART, WITHOUT WRITTEN PERMISSION OF MINI-CIRCUITS.

ASHEETA1.DWG REV:A DATE:01/12/95

Mini-Circuits®
13 Neptune Avenue
Brooklyn NY 11235

PL, rs ,DK801/DK1042, KSN
TB-567+ (50 Ω)

SIZE	CODE IDENT	DRAWING NO:	REV:
A	15542	98-PL-249	B

FILE:	SCALE:	SHEET:
98PL249	5:1	1 OF 1

ELECTRICAL SCHEME-GENERAL
(TB for KSN)

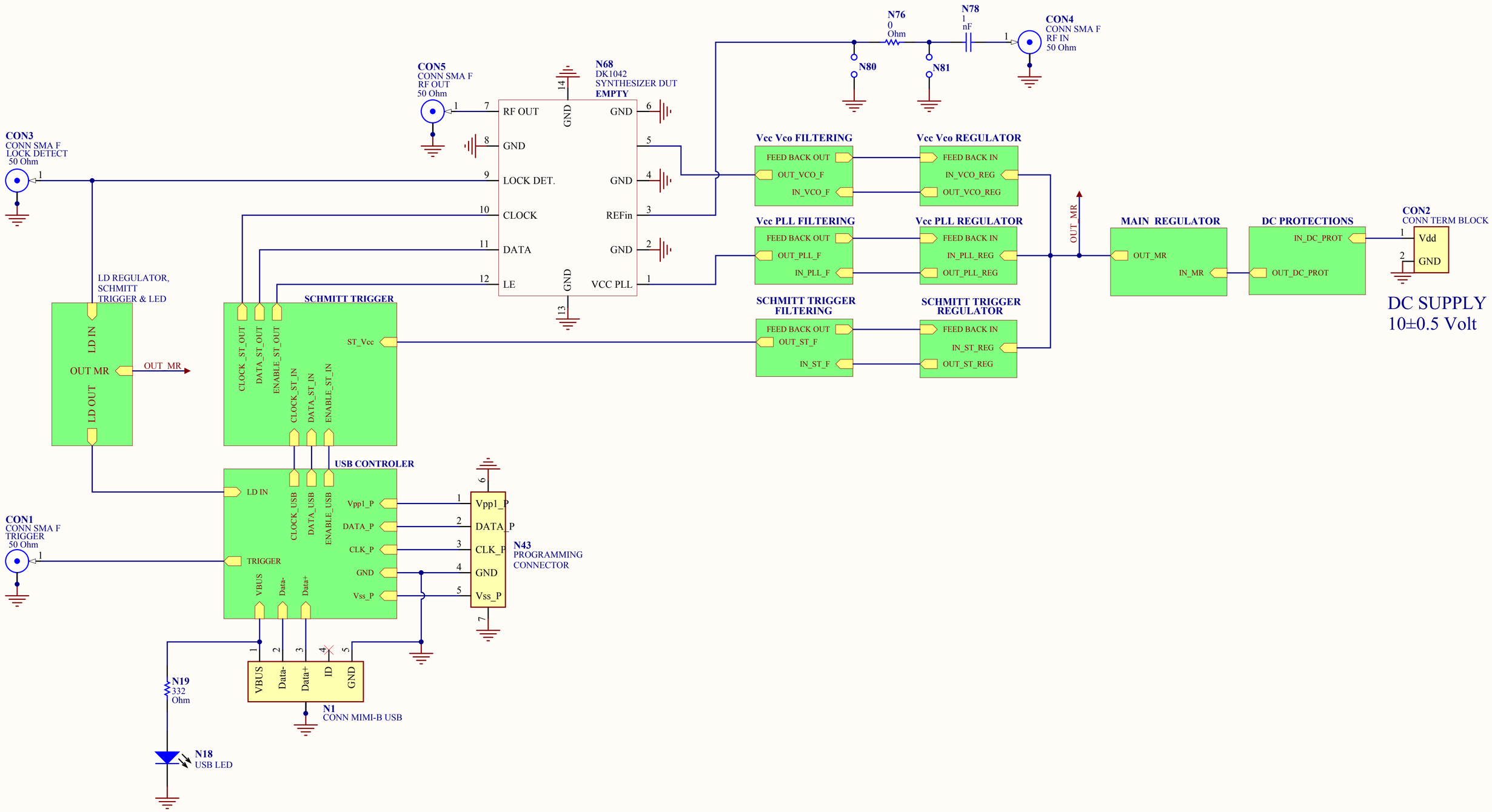

THIS DOCUMENT AND ITS CONTENTS ARE THE PROPERTY OF MINI-CIRCUITS.

DC PROTECTIONS

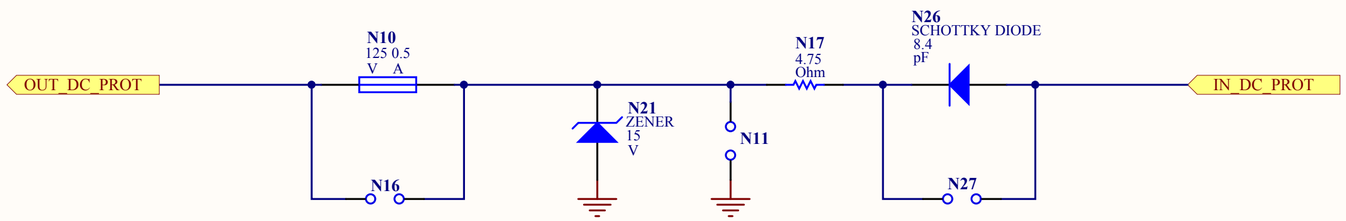

THIS DOCUMENT AND ITS CONTENTS ARE THE PROPERTY OF MINI-CIRCUITS.

MAIN REGULATOR

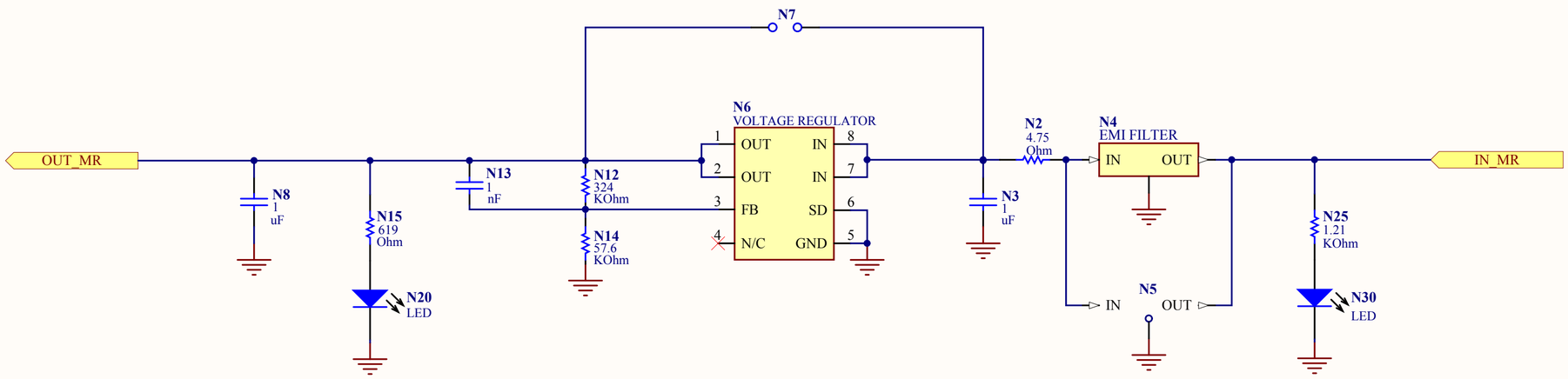

THIS DOCUMENT AND ITS CONTENTS ARE THE PROPERTY OF MINI-CIRCUITS.

VCC VCO REGULATOR

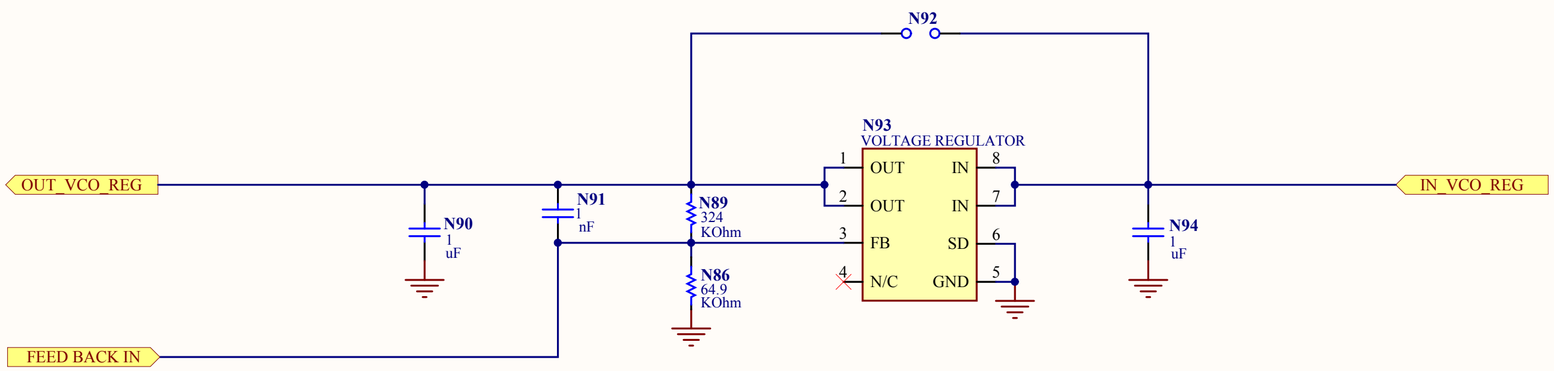

VCC PLL REGULATOR

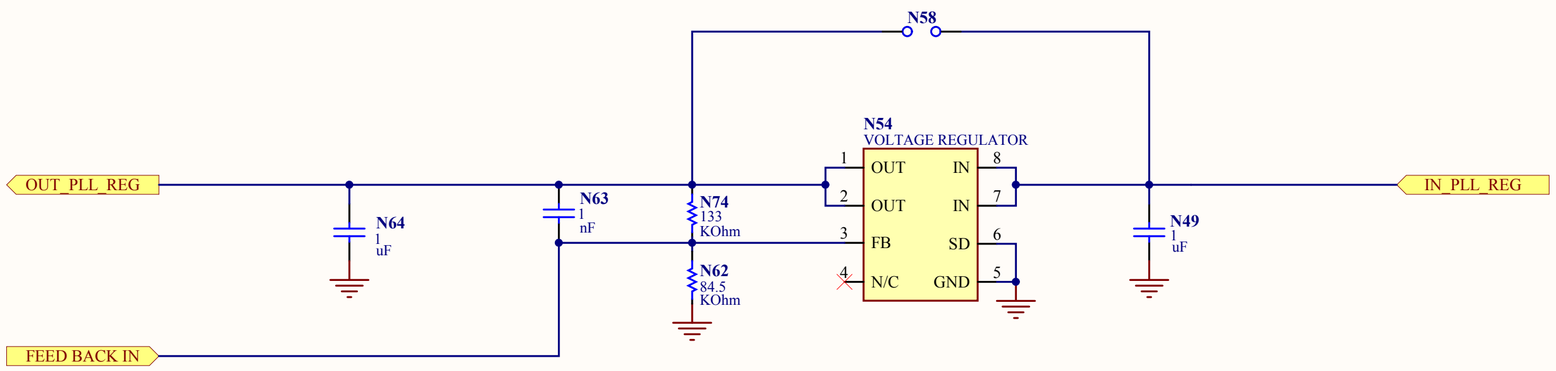

THIS DOCUMENT AND ITS CONTENTS ARE THE PROPERTY OF MINI-CIRCUITS.

SCHMITT TRIGGER REGULATOR

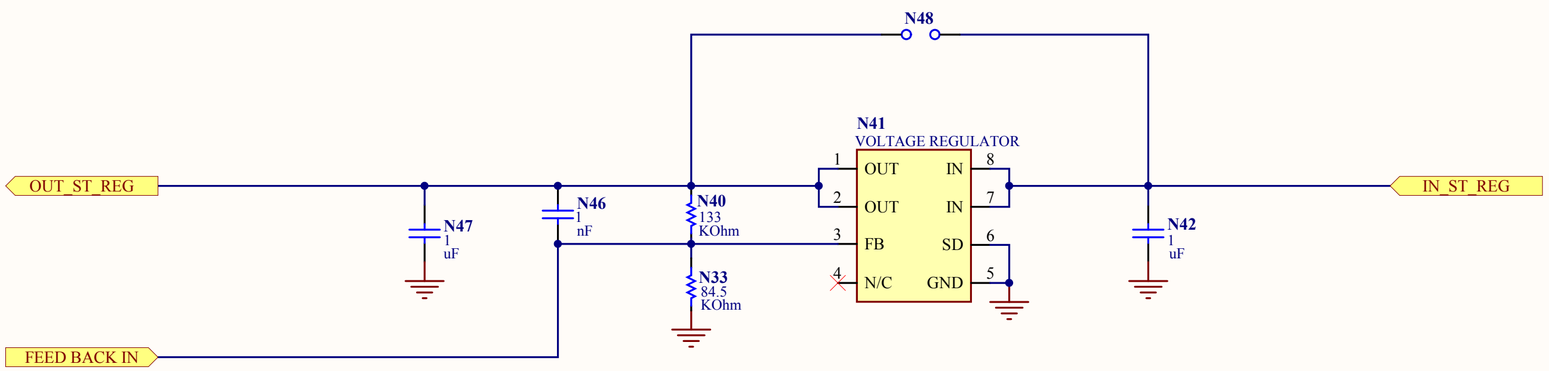

THIS DOCUMENT AND ITS CONTENTS ARE THE PROPERTY OF MINI-CIRCUITS.

VCC VCO FILTERING

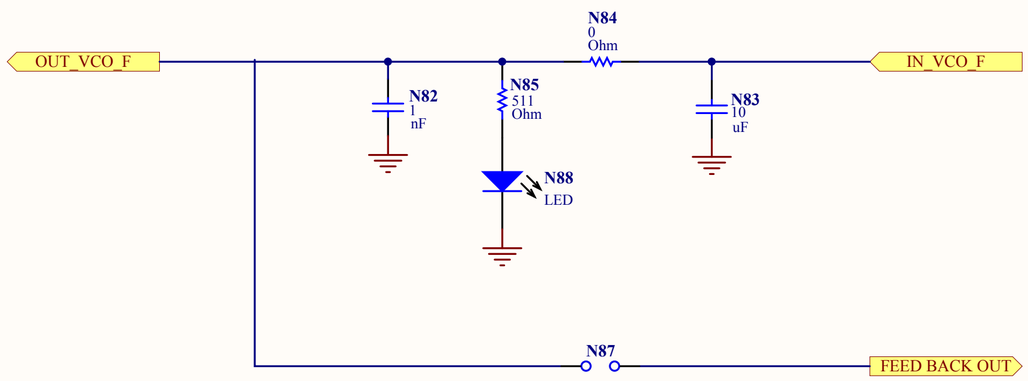

THIS DOCUMENT AND ITS CONTENTS ARE THE PROPERTY OF MINI-CIRCUITS.

VCC PLL FILTERING

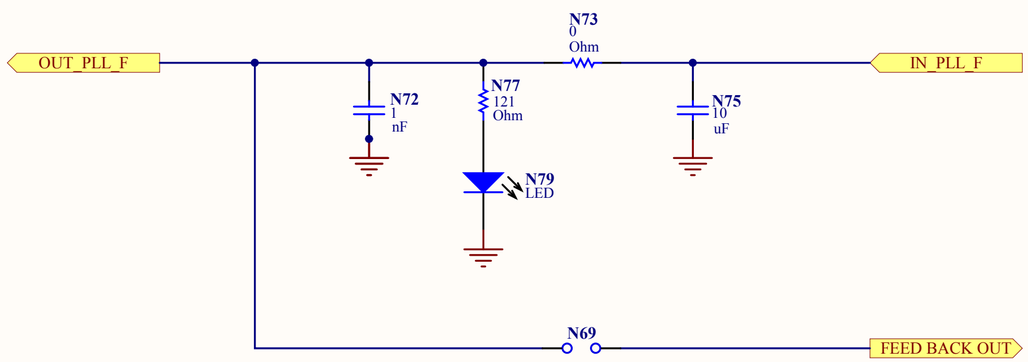

SCHMITT TRIGGER FILTERING

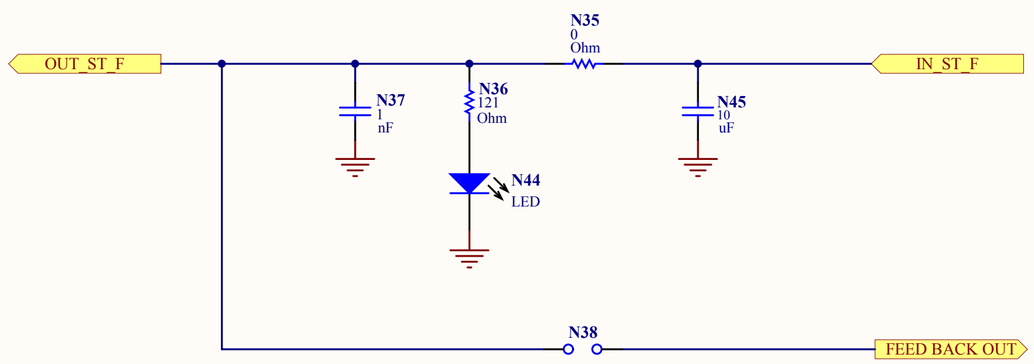

SCHMITT TRIGGER

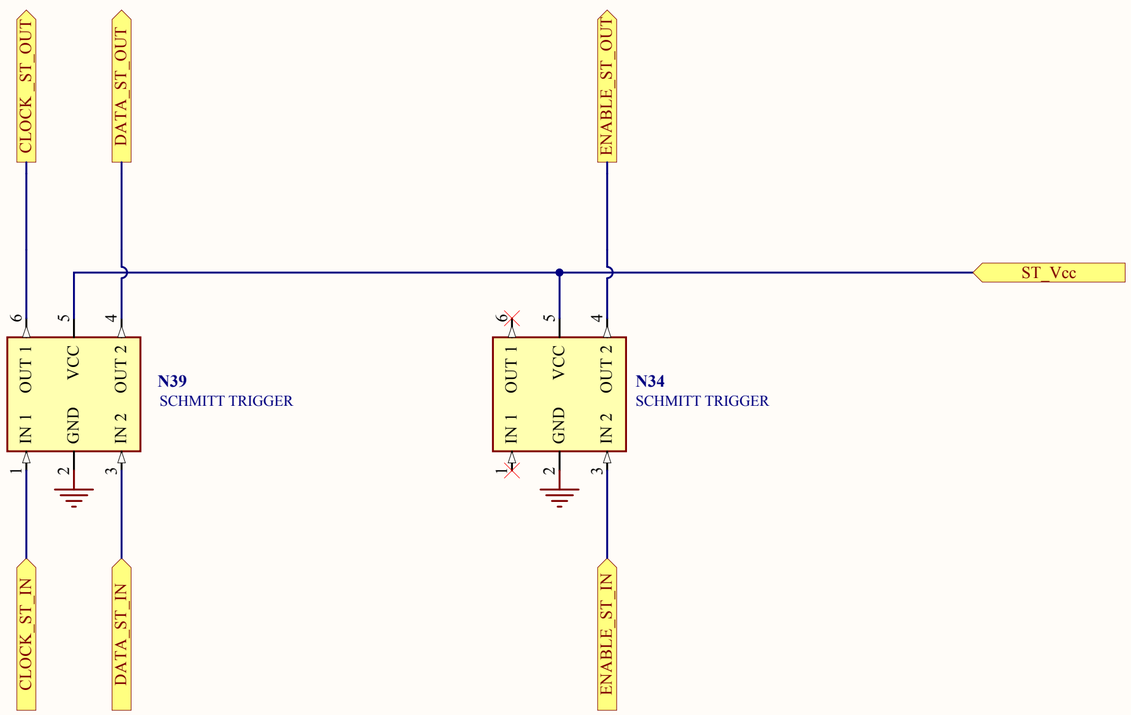

THIS DOCUMENT AND ITS CONTENTS ARE THE PROPERTY OF MINI-CIRCUITS.

USB CONTROLER

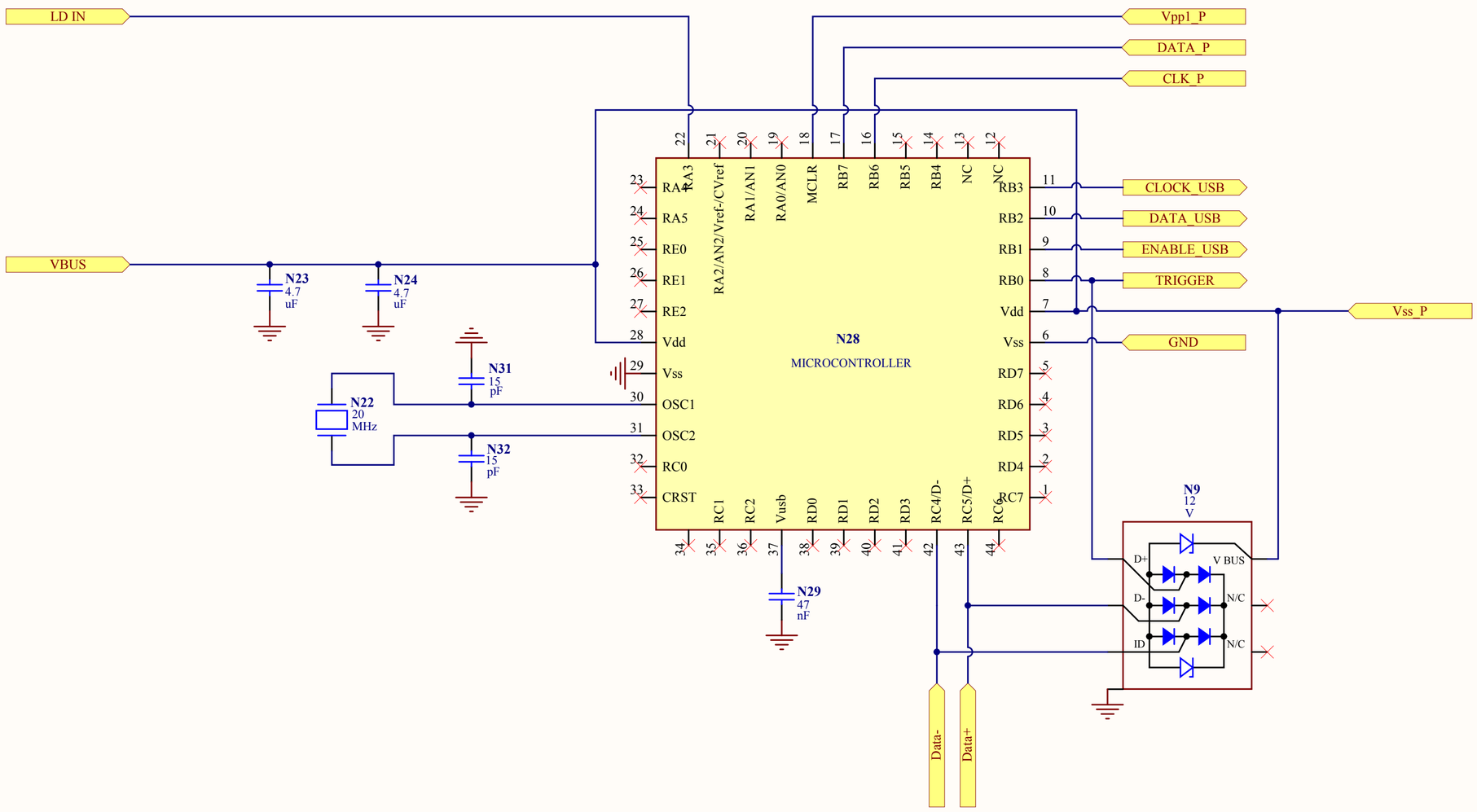

LD REGULATOR SCHMITT TRIGGER AND LED

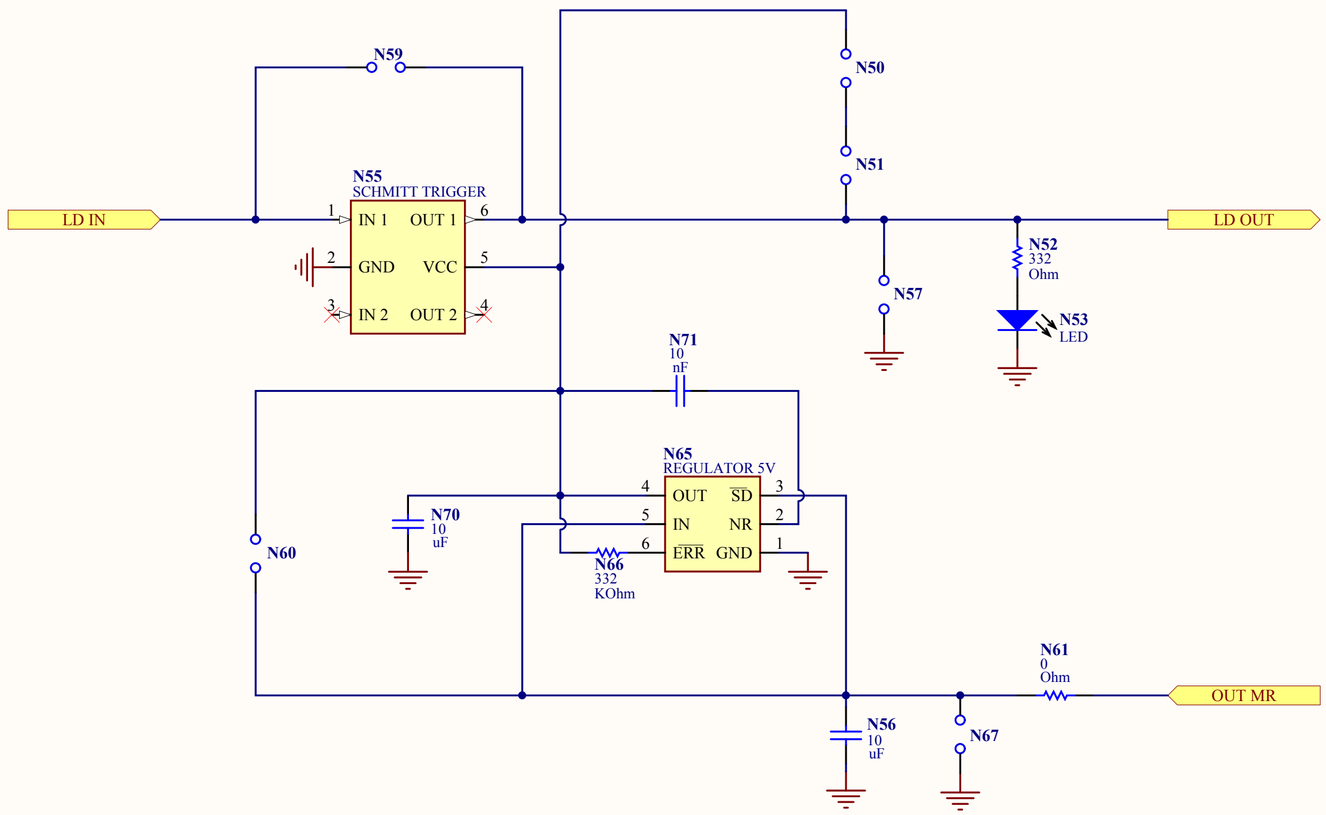

DWG NO: TB-567-6+

REV: A

THIS DOCUMENT AND ITS CONTENTS ARE THE PROPERTY OF MINI-CIRCUITS.

Evaluation Board and Circuit

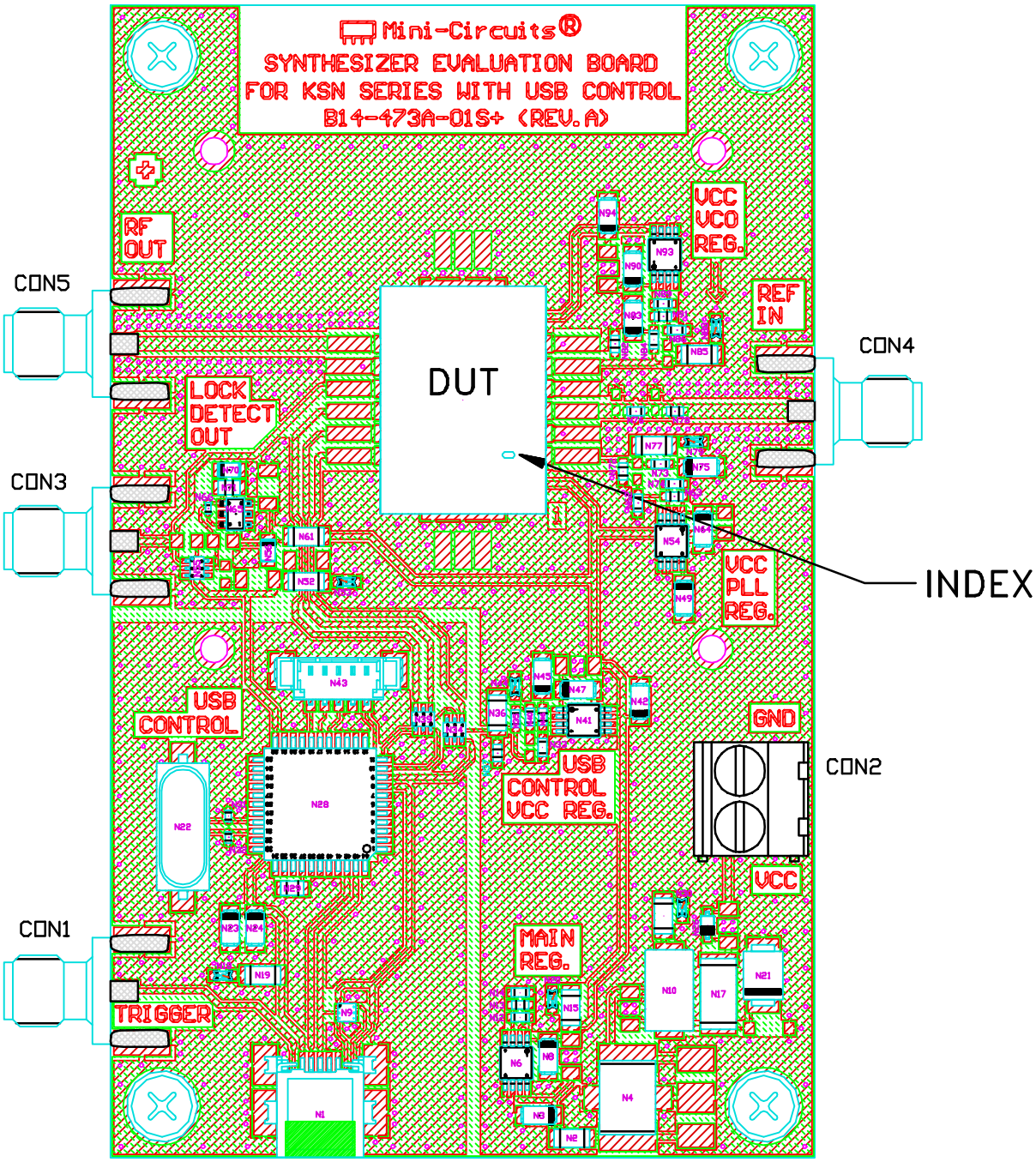

TB-567-6+

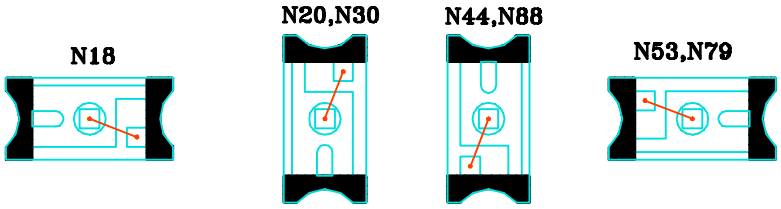

NOTES:

1. SMA F JACK CONNECTORS.
2. PCB MATERIAL: FR4 OR EQUIVALENT, DIALECTRIC CONSTANT=4.7, DIALECTRIC THICKNESS=.059 INCH.

THIS DOCUMENT AND ITS CONTENTS ARE THE PROPERTY OF MINI-CIRCUITS.

Mini-Circuits

Environmental Specifications ENV65T1

All Mini-Circuits products are manufactured under exacting quality assurance and control standards, and are capable of meeting published specifications after being subjected to any or all of the following physical and environmental test.

Specification	Test/Inspection Condition	Reference/Spec
Operating Temperature	-45° to 85°C Ambient Environment	Individual Model Data Sheet
Storage Temperature	-55° to 100° C Ambient Environment	Individual Model Data Sheet
Humidity	90 to 95% RH, 240 hours, 50°C	MIL-STD-202, Method 103, Condition A, Except 50°C and end-point electrical test done within 12 hours
Thermal Shock	-55° to 100°C, 100 cycles	MIL-STD-202, Method 107, Condition A-3, except +100°C
Solder Reflow Heat	Sn-Pb Eutectic Process: 225°C peak Pb-Free Process, 245°C peak	J-STD-020, Table 4-1, 4-2 and 5-2, Figure 5-1
Solderability	10X Magnification	J-STD-002, Para 4.2.5, Test S, 95% Coverage
Vibration (High Frequency)	20g peak, 20-2000 Hz, 4 times in each of three axes (total 12)	MIL-STD-883, Method 2007.3, Condition A
Mechanical Shock	50g, 11 ms, 1/2-sine, 18 shocks: 3 each direction, each of 3 axes	MIL-STD-202, Method 213, Condition A
Marking Resistance to Solvents	Isopropyl alcohol + mineral spirits at 25°C; terpene defluxer at 25°C; distilled water + proylene glycol monomethyl ether + monoethanolamine at 63°C to 70°C	MIL-STD-202, Method 215

This document and its contents are the property of Mini-Circuits.