NON-CATALOG

Xtra Long Life 10 million cycles

USB/Ethernet RF Switch Matrix RC-3SPDT-A18

50Ω DC to 18 GHz

The Big Deal

- 3 mechanical SPDT switch box
- High reliability, 10 million switch cycles
- 20W power rating (cold switching)
- High isolation, 85 dB typ

Case Style: LM1850

Software Package

Model No.	Description	Qty.
RC-3SPDT-A18	**USB/Ethernet RF Switch**	1
Included Accessories		
AC/DC-24-3W1	AC/DC 24V Adapter	1
CBL-3W1-XX	AC Power Cord *(see Ordering Information)*	1
USB-CBL-AB-3+	2.7 ft USB cable	1

Applications

- R&D
- Automated Test equipment
- Controlling RF signal paths

RoHS Compliant

See our web site for RoHS Compliance methodologies and qualifications

Product Overview

Mini-Circuits' RC-3SPDT-A18 is a general purpose RF switch matrix controlled via either USB or Ethernet-TCP/IP (supports HTTP and Telnet protocols). The model contains 3 electromechanical SPDT, absorptive fail-safe RF switches constructed in break-before-make configuration and powered by +24VDC with switching time of 25 ms typical. The RF switches operate over a wide frequency band from DC to 18 GHz, have low insertion loss (0.2 dB typical) and high isolation (85 dB typical), making the switch matrix perfectly suitable for a wide variety of RF applications.

The RC-3SPDT-A18 is constructed in a compact, rugged metal case (4.5" x 6.0" x 2.25") with 9 SMA (F) connectors (COM,1 and 2 for each switch) USB type B port, standard RJ45 network socket and DC power input. Full software support is provided and can be downloaded from our website any time at **https://www.minicircuits.com/softwaredownload/rfswitchcontroller.html**. The package includes our user-friendly GUI application for Windows and a full API with programming instructions for Windows and Linux environments (both 32-bit and 64-bit systems). Also included is a 2.7 ft USB cable and AC/DC power adapter. Longer USB cables, Ethernet cables and a mounting bracket are available as optional accessories.

Key Features

Feature	Advantages
Ethernet-TCP/IP- **HTTP** and **Telnet** Protocols (Supports DHCP and Static IP)	The RC-3SPDT-A18 switch matrix can be controlled from any Windows®, Mac®, or Linux® computer, or even a mobile device with a network connection and Ethernet-TCP/IP (HTTP or Telnet protocols) support. Using a VPN would allow remote control from anywhere in the world.
USB HID (Human Interface Device)	User may also control the switch matrix via USB connection. Plug-and-Play, no driver required. Compatible with Windows® or Linux® operating systems using 32 and 64 bit architecture.
RF SPDT absorptive electromechanical switches	Wideband (DC to 18 GHz) with low insertion loss (0.2 dB typ.), very high isolation (85 dB typ.), and high power rating (20W cold switching).
Switch Cycle Counters	Allows user to monitor the exact usage and plan test requirements accordingly.
Break-before-make configuration	Prevents the momentary connection of the old and new signal paths and reduces transient phenomena.

Trademarks: Windows is a registered trademark of Microsoft Corporation in the United States and other countries. Linux is a registered trademark of Linus Torvalds. Pentium is a registered trademark of Intel Corporation. Mac is a registered trademark of Apple Corporation in the United States and other countries. Neither Mini-Circuits nor the Mini-Circuits RC-3SPDT-A18 are affiliated with or endorsed by the owners of the above referenced trademarks Mini-Circuits and the Mini-Circuits logo are registered trademarks of Scientific Components Corporation.

Patents: Protected by US Patents 5,272,458; 6,414,577; 6,650,210; 7,633,361 and 7,843,289

Mini-Circuits®
www.minicircuits.com P.O. Box 350166, Brooklyn, NY 11235-0003 (718) 934-4500 sales@minicircuits.com

Electrical Specifications

Parameter	Port	Conditions	Min.	Typ.	Max.	Units
Frequency	All RF Ports	—	DC		18	GHz
Power On Sequence: Connect the 24V power, followed by the USB control and/or Ethernet cable before turning on the Switch Matrix.						
RF Insertion Loss (per switch)		DC to 1 GHz	–	0.10	0.15	dB
		1 GHz to 8 GHz	–	0.15	0.30	
		8 GHz to 12 GHz	–	0.25	0.40	
		12 GHz to 18 GHz	–	0.30	0.50	
RF VSWR		DC to 1 GHz	–	1.05	1.10	:1
		1 GHz to 8 GHz	–	1.20	1.30	
		8 GHz to 12 GHz	–	1.20	1.35	
		12 GHz to 18 GHz	–	1.25	1.40	
RF Isolation (per switch)		DC to 1 GHz	85	100	–	dB
		1 GHz to 8 GHz	75	90	–	
		8 GHz to 12 GHz	70	80	–	
		12 GHz to 18 GHz	60	66	–	
Switching Time		–	–	25	–	ms
RF Power (cold switching) [1,2]		–	–	–	20	W
Rated Voltage	$24V_{DC}$ IN	provided via external power adapter	23	24	25	V
	USB Port	–	–	5	–	
Rated Current	$24V_{DC}$ IN	All switches in COM -> 2 position	–	610	850	mA
		All switches in COM -> 1 position	–	105	130	
	USB Port	All switches in COM -> 2 position	–	10	20	
		All switches in COM -> 1 position	–	10	20	
Life (per switch)		@ 100 mW (hot switching) [3]	10	–	–	million switching cycles
		@ 1 W (hot switching) [3]	–	3	–	

[1] Power handling is specified with RF applied to the COM port and external load connected to either 1 or 2 of the respective switch
[2] Cold switching describes switch operation where there is no significant user signal present at the moment the switch contacts open or close.
[3] Exceeding these limits will result in reduced life.

Absolute Maximum Ratings[4]

Operating Temperature	0°C to 40°C
Storage Temperature	-15°C to 85°C
DC Voltage max.	26V
RF power (through path)	20W
RF power (into internal termination)	1W

[4] Permanent damage may occur if any of these limits are exceeded.

Connections

$24V_{DC}$ IN	(2.1 mm center positive DC Socket)
RF Switch A (1, COM, 2)	(SMA female)
RF Switch B (1, COM, 2)	(SMA female)
RF Switch C (1, COM, 2)	(SMA female)
USB	(USB type B receptacle)
Network (Ethernet/LAN)	(RJ45 socket)

Block Diagram

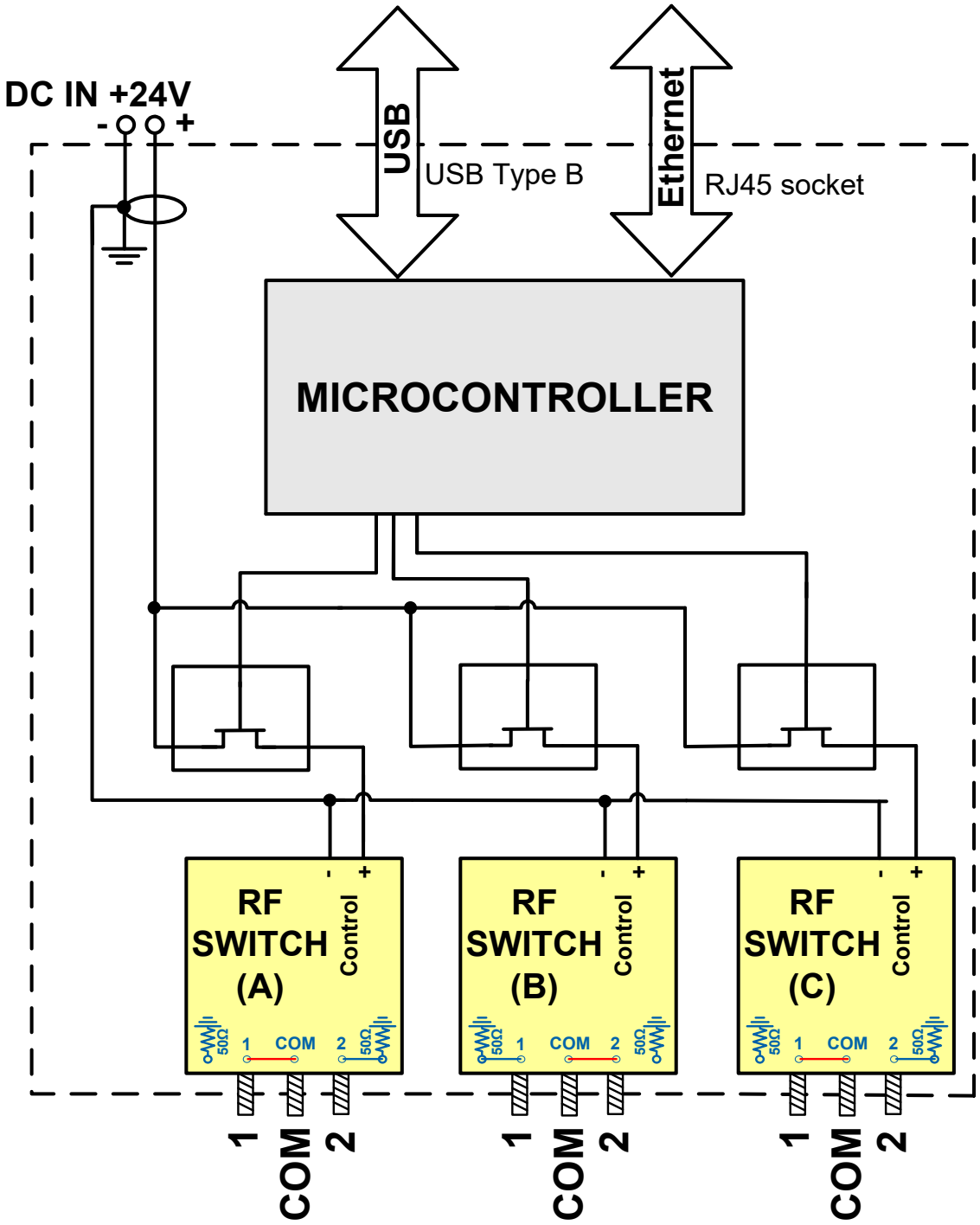

Outline Drawing (LM1850)

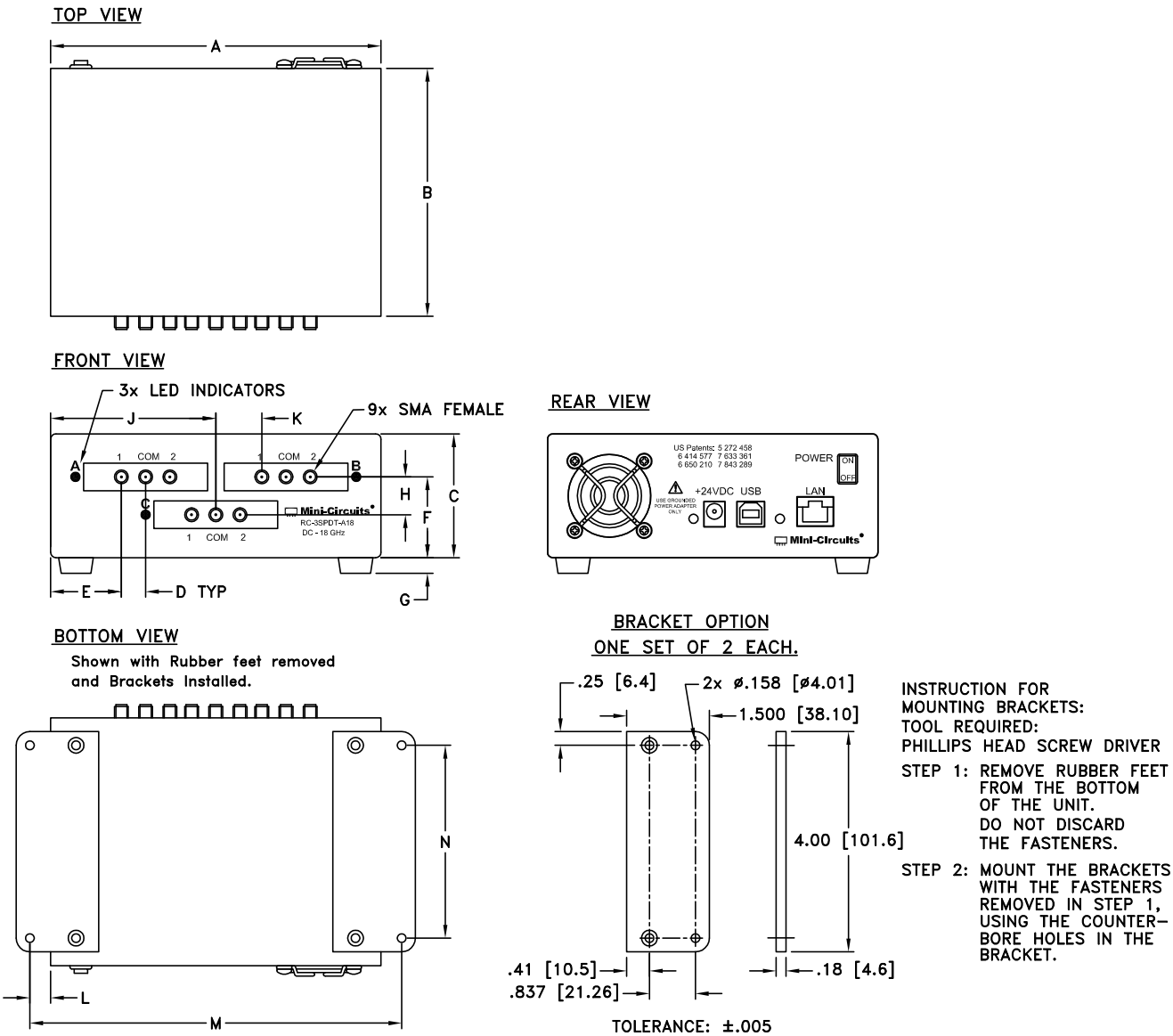

Outline Dimensions (inch / mm)

A	B	C	D	E	F	G	H	J	K	WT. GRAMS
6.00	**4.50**	**2.25**	**0.440**	**1.28**	**1.47**	**0.28**	**3.500**	**.375**	**6.75**	**875**
152.4	114.3	57.2	11.18	32.5	37.3	7.1	88.9	9.52	171.4	

Configuration A: 3 SPDT switches

- Power handling is specified with RF applied to the COM port and output load connected to either 1 or 2 of the respective switch.
- When connecting a coaxial semi flex cable, tighten connectors alternately using an 8in/lb torque wrench to insure proper contact at each end.

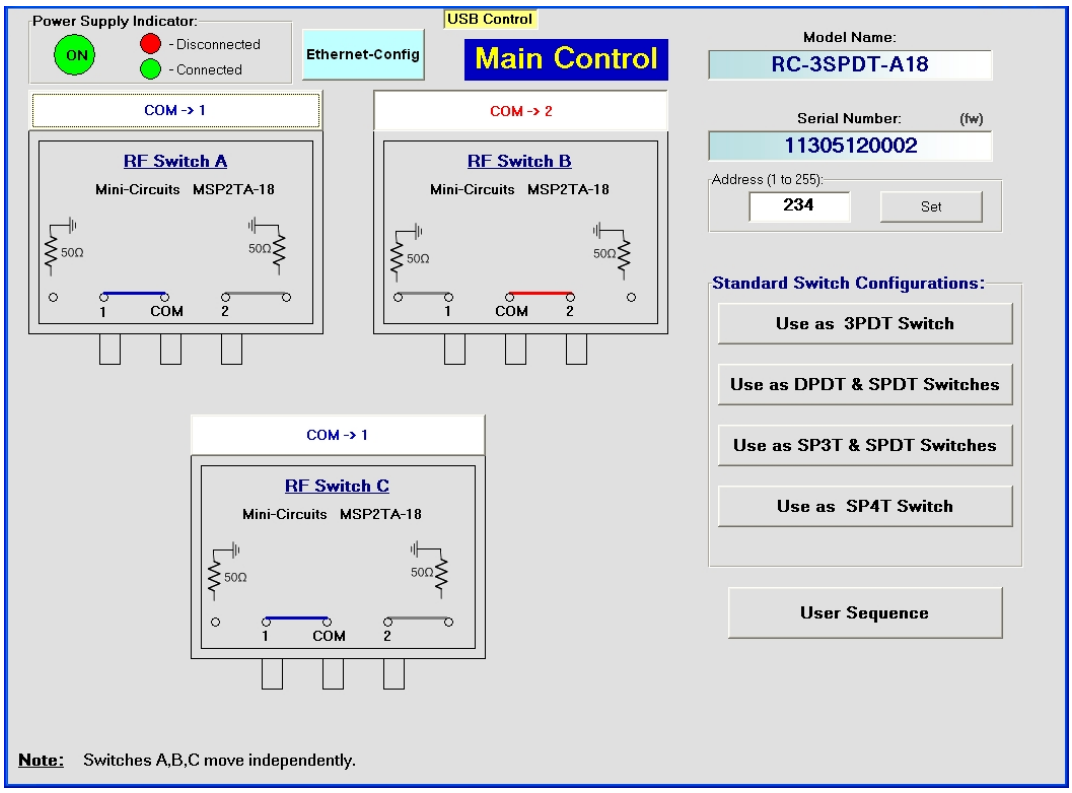

Config. A

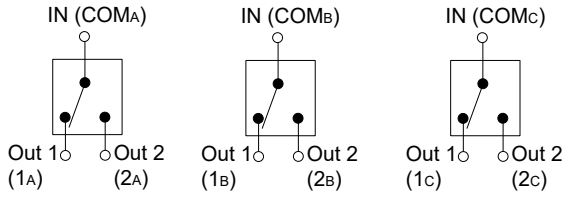

SPDT: Switch A, B or C Logic
IN ←→Out1 : 0
IN ←→Out2 : 1
Switches move independently.

Configuration B: 3PDT switch

- Power handling is specified with RF applied to the COM port and output load connected to either 1 or 2 of the respective switch.
- When connecting a coaxial semi flex cable, tighten connectors alternately using an 8in/lb torque wrench to insure proper contact at each end.

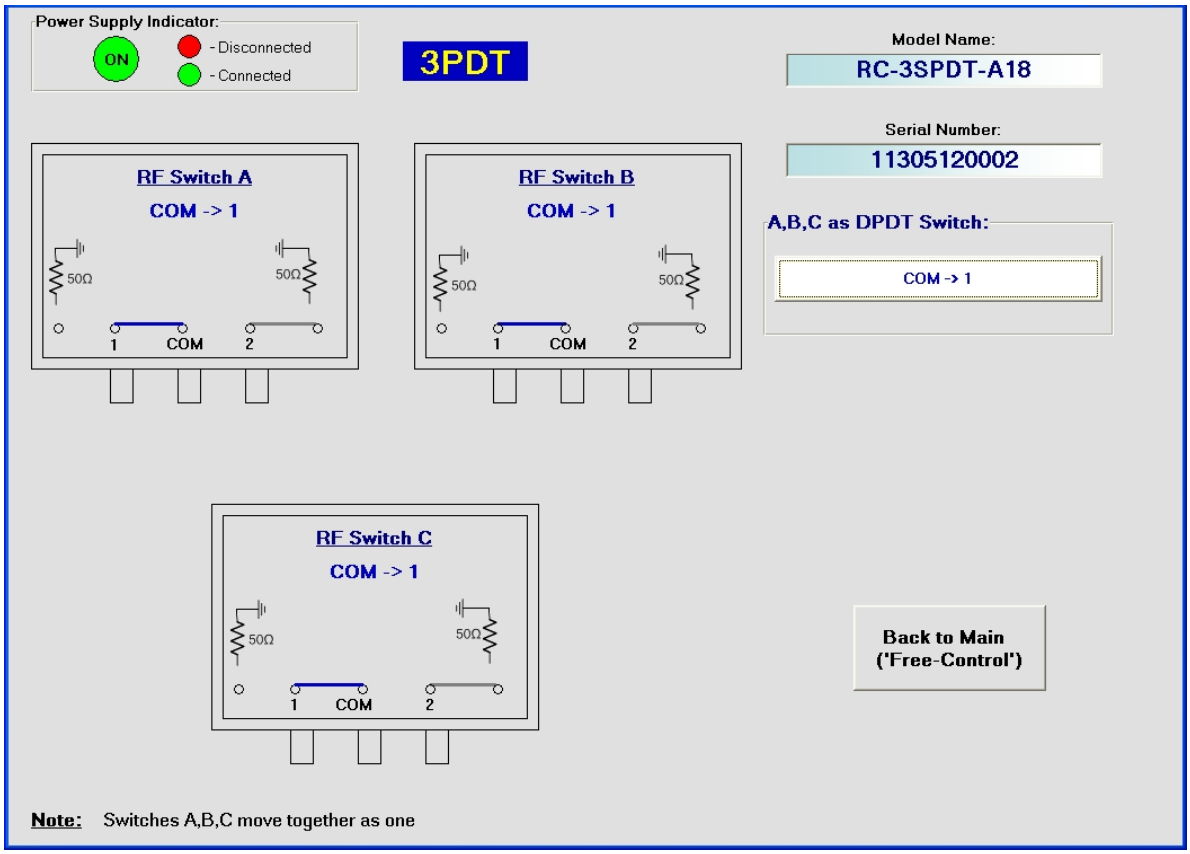

Config. C

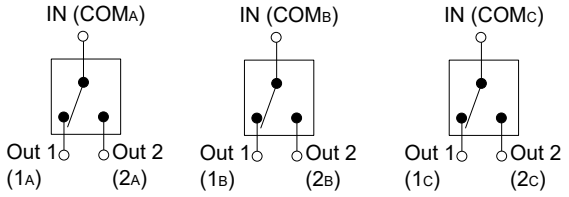

3PDT: Switch A, B & C Logic
IN ←→Out1 : 0, 0, 0
IN ←→Out2 : 1, 1, 1
All three switches move together as one.

Configuration C: DPDT & SPDT switches

- Power handling is specified with RF applied to the COM port and output load connected to either 1 or 2 of the respective switch.
- When connecting a coaxial semi flex cable, tighten connectors alternately using an 8in/lb torque wrench to insure proper contact at each end.

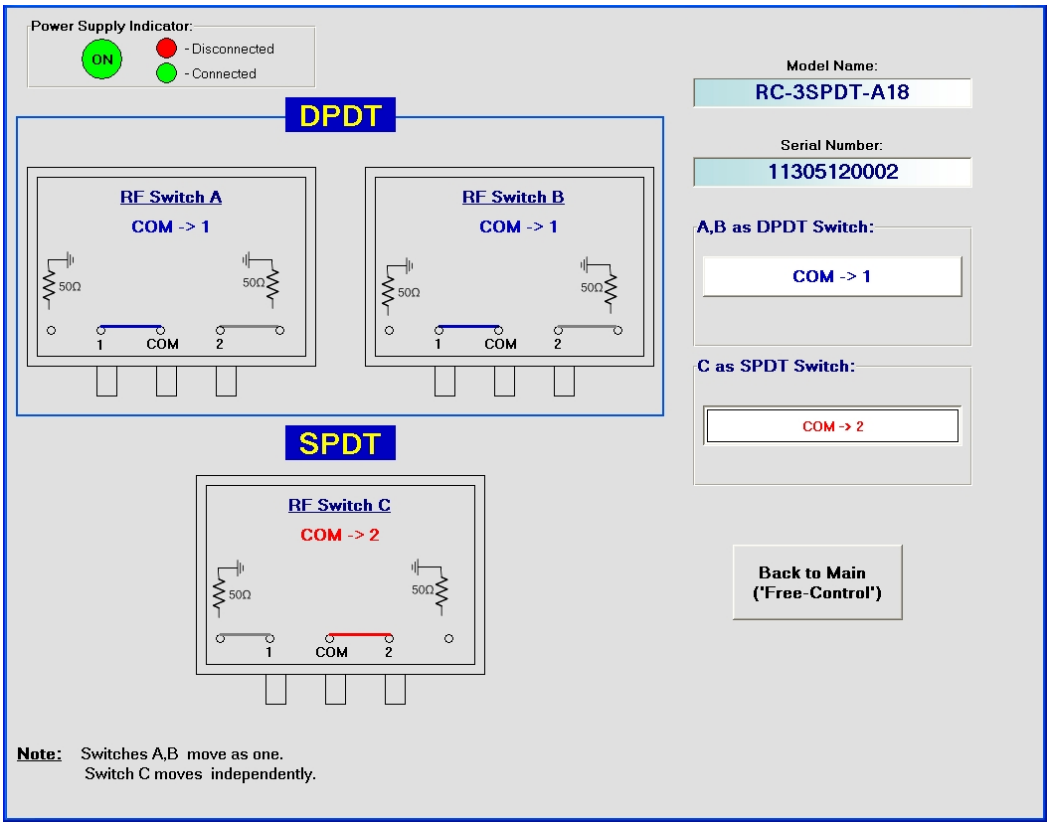

Config. B

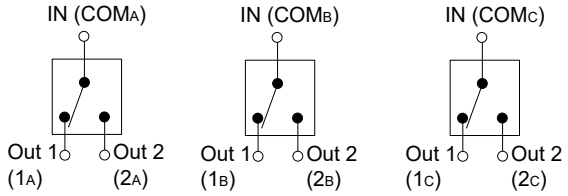

DPDT: Switch A & B Logic
IN ←→Out1 : 0, 0
IN ←→Out2 : 1, 1
Switches A&B move together as one, switch C is separate.

SPDT: Switch C Logic
IN ←→Out1 : 0
IN ←→Out2 : 1

Configuration D: SPDT & SP3T switches

- Power handling is specified with RF applied to the COM port and output load connected to either 1 or 2 of the respective switch.
- When connecting a coaxial semi flex cable, tighten connectors alternately using an 8in/lb torque wrench to insure proper contact at each end.

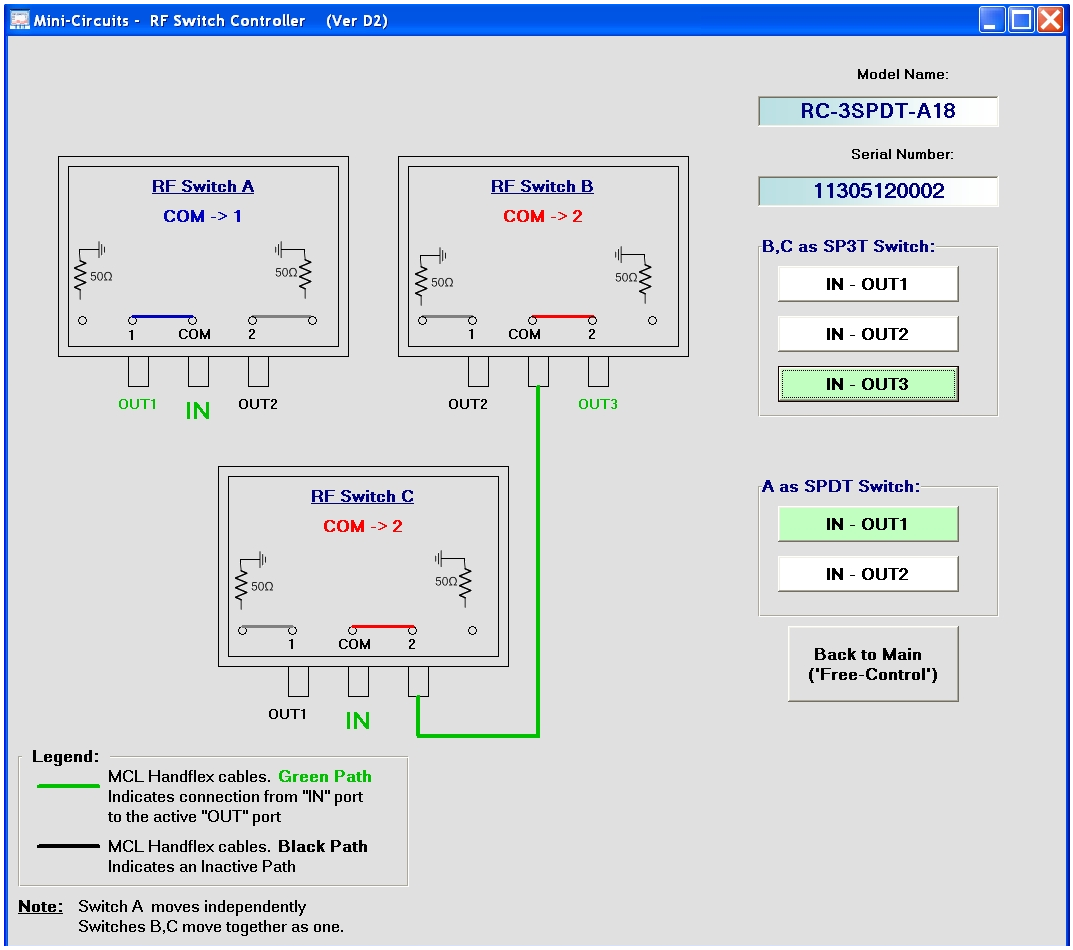

Config. D

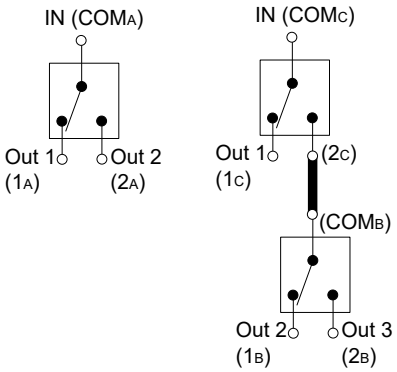

SPDT: Switch A Logic

IN ←→Out1 : 0
IN ←→Out2 : 1

SP3T:

Switch B & C Logic

IN ←→Out1 : Ø, 0
IN ←→Out2 : 1, 0
IN ←→Out3 : 1, 1

Switches B & C move together as one, switch A is separate

Configuration C: SP4T switch

- Power handling is specified with RF applied to the COM port and output load connected to either 1 or 2 of the respective switch.
- When connecting a coaxial semi flex cable, tighten connectors alternately using an 8in/lb torque wrench to insure proper contact at each end.

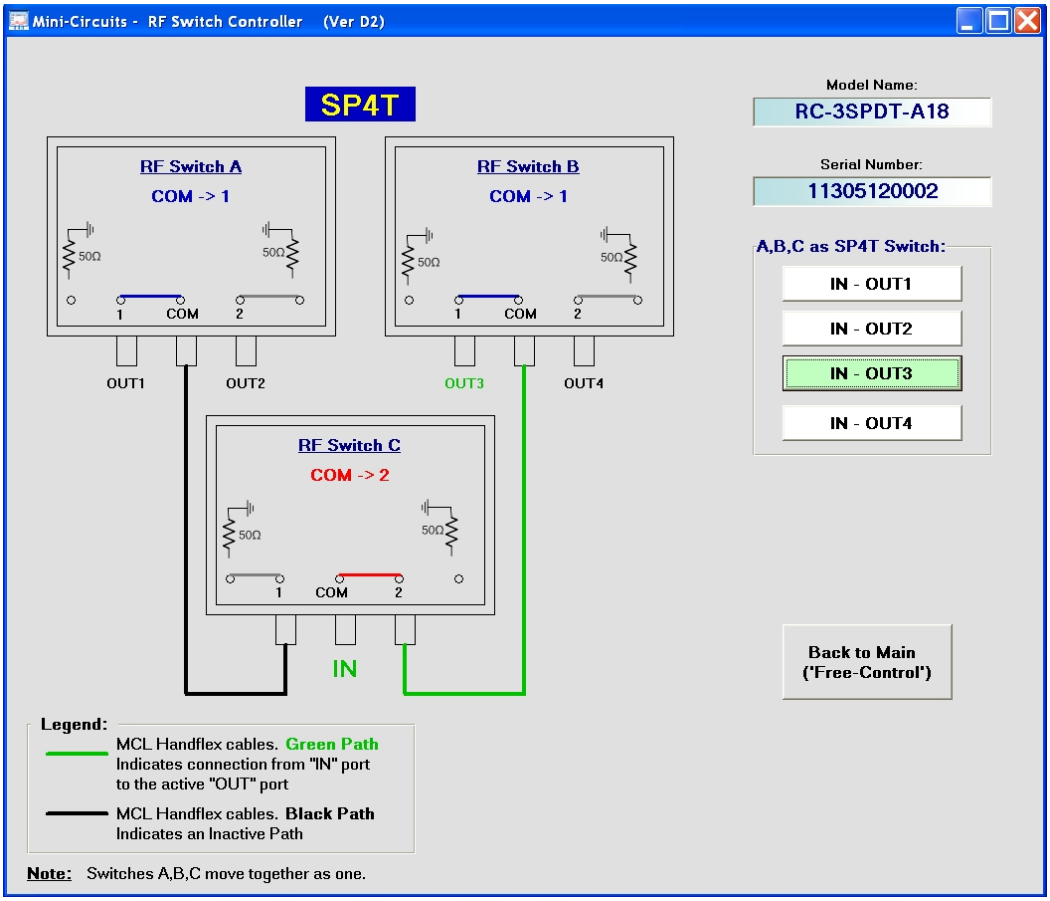

Config. E

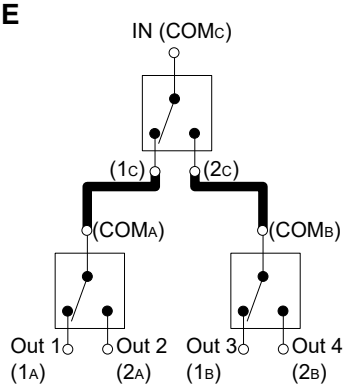

SP4T:

Switch A, B & C Logic

IN ←→Out1 : 0, Ø, 0
IN ←→Out2 : 1, Ø, 0
IN ←→Out3 : Ø, 0, 1
IN ←→Out4 : Ø, 1, 1

All three switches move together as one.

User Switching Sequence - for setting any configuration or sequence needed

- Power handling is specified with RF applied to the COM port and output load connected to either 1 or 2 of the respective switch.
- When connecting a coaxial semi flex cable, tighten connectors alternately using an 8in/lb torque wrench to insure proper contact at each end.

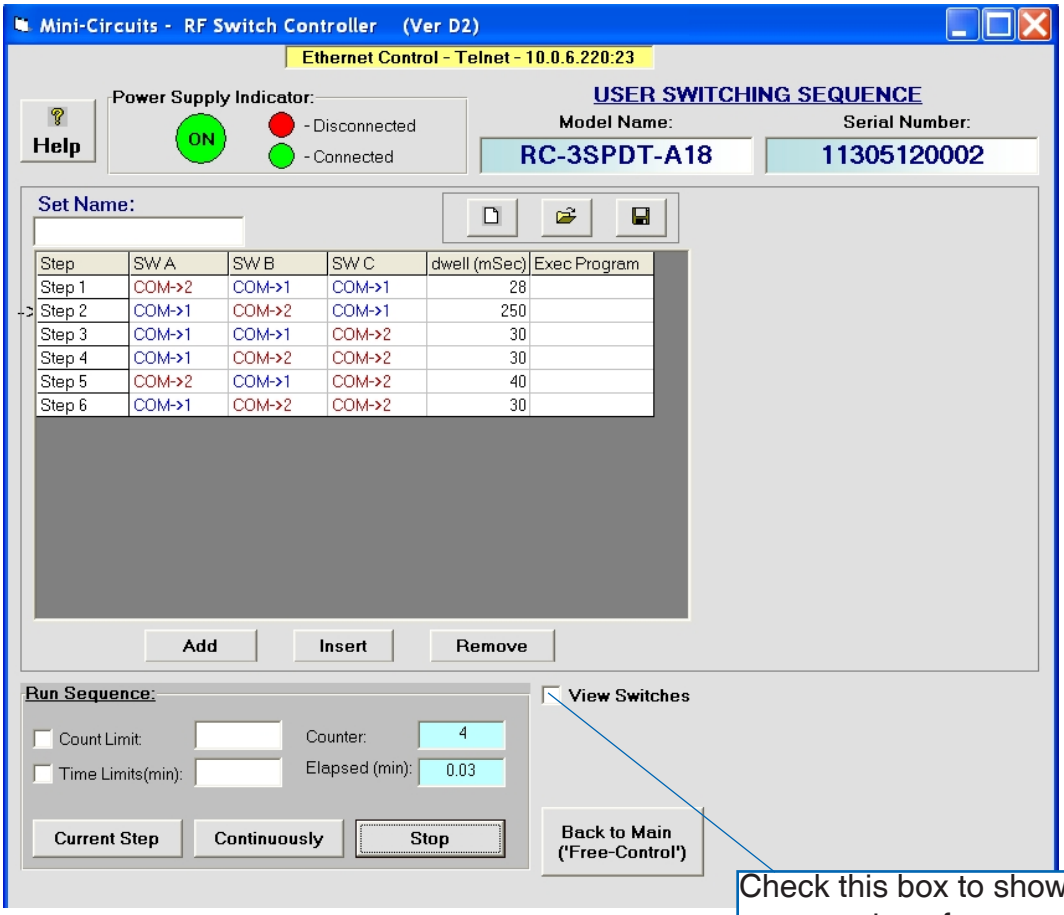

Check this box to show graphical presentation of current switch state(shown below)

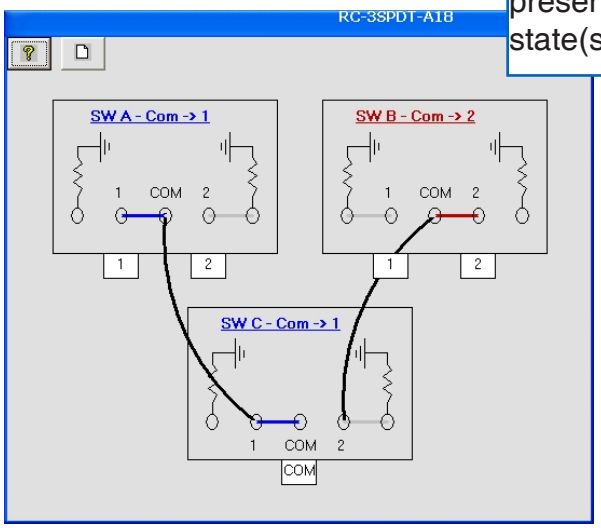

- For instructions on using the GUI See the **user guide** on Mini-Circuits' website
- For programming instructions of the switch matrix see the **programming guide** and **AN-49-001** on Mini-Circuits' website

Software & Documentation Download:

- Mini-Circuits' full software and support package including user guide, Windows GUI, DLL files, programming manual and examples can be downloaded free of charge from: https://www.minicircuits.com/softwaredownload/rfswitchcontroller.html
- Please contact testsolutions@minicircuits.com for support.

Minimum System Requirements

Parameter	Requirements	
Interface	USB HID or HTTP Get/Post or Telnet protocols	
System requirements	GUI:	Windows 32 & 64 bit systems from Windows 98 up to Windows 10
	API DLL (USB)	Windows 32 & 64 bit systems with ActiveX or .Net support from Windows 98 up to Windows 10
	USB interrupt API	Linux, Windows systems from Windows 98 up to Windows 10
	Telnet & HTTP	Any Windows, Mac, or Linux computer with a network port and Ethernet-TCP/IP (HTTP or Telnet protocols) support
Hardware	Pentium® II or higher	

Graphical User Interface (GUI) for Windows
Key Features:

- Set each switch manually
- Set timed sequence of switching states
- Configure switch address and upgrade Firmware

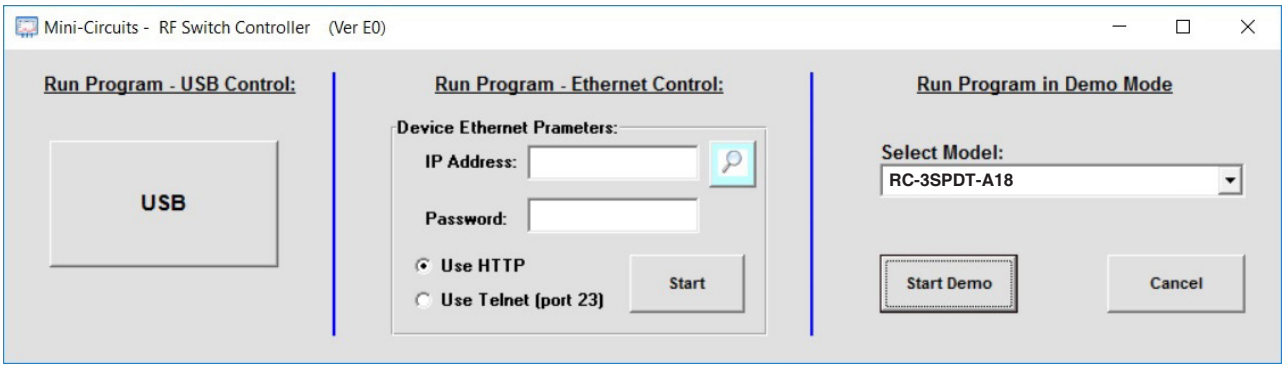

Steps to start RC-3SPDT-A18 GUI via USB

- Click on USB button.
- If more than one unit is connected select S/N from list and click OK.
- Start working.

Steps to start RC-3SPDT-A18 GUI via Ethernet

- Click on search icon.
- Select unit from list of IP addresses and click select
- The selected IP will appear in the IP Address field.
- Select communication protocol (Telnet or HTTP)
- Click on Start and begin working.

Application Programming Interface (API)
Windows Support:

- API DLL files exposing the full switch matrix functionality.
  - ActiveX COM DLL file for creation of 32-bit programs
  - .Net library DLL file for creation of 32 / 64-bit programs
- HTTP Get/Post and Telnet protocols use SCPI commands to provide full control.
- Supported by most common programming environments (refer to application note AN-49-001 for summary of tested environments)

Linux Support:

- Full switch matrix control in a Linux environment is achieved by way of USB interrupt commands. See programming manual at https://www.minicircuits.com/softwaredownload/Prog_Manual-2-Switch.pdf for details

Ordering, Pricing & Availability Information see our web site

Model	Description
RC-3SPDT-A18	USB/Ethernet RF SPDT Switch Matrix

Included Accessories	Part No.	Description
	AC/DC-24-3W1	AC/DC 24V_{DC} Grounded Power Adaptor. Operating temperature: 0°C to +40°C, I_{Max}=2.5A
	CBL-3W1-XX	AC Power Cord (*Select one power cord from below with each Switch Matrix box)*
	USB-CBL-AB-3+	2.7 ft (0.8 m) USB Cable: USB type A(Male) to USB type B(Male)

AC Power Cords[5]	Part No.	Description
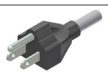	CBL-3W1-US	Power Cord for United States
	CBL-3W1-EU	Power Cord for Europe
	CBL-3W1-UK	Power Cord for United Kingdom
	CBL-3W1-AU	Power Cord for Australia and China
	CBL-3W1-IL	Power Cord for Israel

5. Power cords for other countries are also available, if you need a power cord for a country not listed in the table please contact testsolutions@minicircuits.com.

Optional Accessories	Description
USB-CBL-AB-3+ (spare)	2.7 ft (0.8 m) USB Cable: USB type A(Male) to USB type B(Male)
USB-CBL-AB-7+	6.8 ft (2.1 m) USB Cable: USB type A(Male) to USB type B(Male)
USB-CBL-AB-11+	11 ft (3.4 m) USB Cable: USB type A(Male) to USB type B(Male)
CBL-RJ45-MM-5+	5 ft (1.5 m) Ethernet cable: RJ45(Male) to RJ45(Male) Cat 5E cable
BKT-272-08+	Bracket (One set of 2 each)

Additional Notes

A. Performance and quality attributes and conditions not expressly stated in this specification document are intended to be excluded and do not form a part of this specification document.

B. Electrical specifications and performance data contained in this specification document are based on Mini-Circuit's applicable established test performance criteria and measurement instructions.

C. The parts covered by this specification document are subject to Mini-Circuits standard limited warranty and terms and conditions (collectively, "Standard Terms"); Purchasers of this part are entitled to the rights and benefits contained therein. For a full statement of the Standard Terms and the exclusive rights and remedies thereunder, please visit Mini-Circuits' website at www.minicircuits.com/MCLStore/terms.jsp

Xtra Long Life
USB/Ethernet RF SPDT RC-3SPDT-A18

Typical Performance Data

TEST CONDITIONS: @Temperature = 0degC

FREQUENCY (MHz)	INSERTION LOSS ON (dB)		ISOLATION OFF (dB)		VSWR COM (:1)		VSWR COM->2 (:1)		VSWR COM->1 (:1)	
	COM-1	COM-2	COM-1	COM-2	ON	OFF	1	2	1	2
10	0.01	0.00	95.10	86.47	1.01	1.01	1.01	1.01	1.01	1.01
20	0.02	0.01	93.18	87.42	1.00	1.00	1.00	1.01	1.01	1.01
30	0.03	0.01	95.85	86.46	1.00	1.01	1.00	1.00	1.00	1.01
40	0.03	0.02	89.59	86.17	1.01	1.01	1.00	1.01	1.01	1.01
50	0.00	0.01	88.52	86.87	1.01	1.01	1.00	1.01	1.01	1.01
60	0.01	0.02	86.67	93.60	1.01	1.01	1.00	1.01	1.01	1.01
70	0.00	0.02	86.13	105.32	1.01	1.01	1.00	1.01	1.01	1.01
80	0.00	0.02	91.81	91.77	1.01	1.01	1.00	1.01	1.01	1.01
90	0.01	0.02	91.66	86.50	1.01	1.01	1.01	1.01	1.01	1.00
100	0.00	0.01	85.19	93.82	1.01	1.01	1.01	1.01	1.01	1.00
200	0.00	0.02	92.10	102.85	1.01	1.01	1.01	1.01	1.00	1.01
300	0.00	0.03	100.28	102.69	1.01	1.01	1.02	1.01	1.01	1.02
400	0.01	0.03	95.76	94.49	1.01	1.01	1.02	1.02	1.02	1.02
500	0.01	0.03	109.12	116.46	1.02	1.02	1.02	1.02	1.01	1.02
600	0.01	0.03	100.90	108.20	1.01	1.01	1.01	1.01	1.01	1.02
700	0.02	0.03	116.31	121.52	1.01	1.01	1.02	1.01	1.01	1.02
800	0.02	0.04	110.03	97.18	1.01	1.01	1.02	1.02	1.01	1.02
900	0.02	0.03	108.98	103.99	1.01	1.01	1.03	1.02	1.02	1.03
1000	0.02	0.04	106.35	121.29	1.01	1.01	1.03	1.02	1.02	1.03
1200	0.02	0.04	103.47	102.22	1.02	1.01	1.03	1.01	1.01	1.03
1400	0.02	0.04	101.98	104.06	1.02	1.01	1.04	1.02	1.01	1.04
1600	0.03	0.05	96.41	101.06	1.02	1.01	1.04	1.02	1.01	1.04
1800	0.02	0.05	100.83	112.65	1.02	1.02	1.04	1.03	1.02	1.04
2000	0.03	0.05	101.45	99.34	1.03	1.01	1.05	1.03	1.02	1.04
2200	0.03	0.06	113.29	102.68	1.03	1.02	1.05	1.02	1.02	1.05
2400	0.04	0.06	104.81	92.73	1.03	1.02	1.06	1.03	1.03	1.05
2600	0.04	0.06	99.62	100.57	1.03	1.03	1.07	1.05	1.04	1.06
2800	0.04	0.06	110.09	106.20	1.04	1.03	1.08	1.04	1.04	1.07
3000	0.04	0.06	103.39	104.23	1.05	1.04	1.09	1.04	1.04	1.07
3200	0.05	0.07	102.59	111.71	1.05	1.05	1.09	1.06	1.06	1.08
3400	0.06	0.07	101.92	107.63	1.06	1.07	1.11	1.08	1.08	1.09
3600	0.06	0.07	111.01	99.24	1.08	1.08	1.11	1.07	1.08	1.10
4000	0.06	0.08	101.05	98.32	1.11	1.11	1.13	1.11	1.12	1.11
4500	0.07	0.09	94.42	113.13	1.15	1.15	1.14	1.12	1.14	1.12
5000	0.09	0.11	97.06	96.49	1.16	1.20	1.15	1.19	1.21	1.14
5500	0.11	0.13	98.76	93.61	1.22	1.23	1.14	1.19	1.21	1.12
6000	0.12	0.13	95.96	98.43	1.18	1.22	1.13	1.22	1.24	1.13
6500	0.11	0.13	99.65	103.35	1.18	1.22	1.11	1.21	1.22	1.11
7000	0.11	0.12	95.79	96.78	1.17	1.19	1.09	1.17	1.18	1.09
7500	0.11	0.12	97.32	95.44	1.11	1.15	1.08	1.15	1.15	1.08
8000	0.10	0.12	95.12	97.93	1.13	1.12	1.07	1.13	1.12	1.08
8500	0.12	0.13	97.74	94.74	1.09	1.11	1.09	1.12	1.11	1.09
9000	0.13	0.14	93.42	98.17	1.07	1.07	1.08	1.05	1.06	1.09
9500	0.13	0.14	93.39	92.86	1.07	1.06	1.09	1.07	1.06	1.10
10000	0.14	0.15	91.41	91.96	1.04	1.07	1.10	1.06	1.07	1.12
12000	0.21	0.20	88.35	87.13	1.14	1.13	1.14	1.08	1.15	1.11
13000	0.23	0.25	88.31	86.97	1.17	1.16	1.23	1.09	1.15	1.18
14000	0.25	0.28	86.34	84.87	1.11	1.14	1.30	1.11	1.17	1.26
15000	0.31	0.34	84.64	82.50	1.14	1.25	1.33	1.22	1.25	1.31
16000	0.38	0.35	82.89	80.79	1.09	1.20	1.26	1.20	1.21	1.27
17000	0.34	0.31	81.15	79.04	1.08	1.03	1.18	1.07	1.05	1.15
18000	0.37	0.36	77.96	76.83	1.05	1.17	1.29	1.19	1.17	1.17

Notes
A. Performance and quality attributes and conditions not expressly stated in this specification document are intended to be excluded and do not form a part of this specification document.
B. Electrical specifications and performance data contained in this specification document are based on Mini-Circuit's applicable established test performance criteria and measurement instructions.
C. The parts covered by this specification document are subject to Mini-Circuits standard limited warranty and terms and conditions (collectively, "Standard Terms"); Purchasers of this part are entitled to the rights and benefits contained therein. For a full statement of the Standard Terms and the exclusive rights and remedies thereunder, please visit Mini-Circuits' website at www.minicircuits.com/MCLStore/terms.jsp

Xtra Long Life
USB/Ethernet RF SPDT RC-3SPDT-A18

Typical Performance Data

TEST CONDITIONS: @Temperature = +25degC

FREQUENCY (MHz)	INSERTION LOSS ON (dB)		ISOLATION OFF (dB)		VSWR COM (:1)		VSWR COM->2 (:1)		VSWR COM->1 (:1)	
	COM-1	COM-2	COM-1	COM-2	ON	OFF	1	2	1	2
10	0.00	0.00	90.36	94.64	1.00	1.00	1.01	1.00	1.00	1.01
20	0.01	0.00	98.54	99.26	1.00	1.00	1.01	1.00	1.00	1.02
30	0.02	0.01	92.63	93.61	1.00	1.00	1.01	1.00	1.00	1.02
40	0.02	0.01	91.53	89.28	1.01	1.00	1.01	1.01	1.01	1.02
50	0.00	0.01	92.68	90.91	1.00	1.00	1.01	1.00	1.00	1.02
60	0.00	0.01	93.39	85.29	1.00	1.00	1.01	1.00	1.00	1.02
70	0.00	0.00	92.76	93.80	1.00	1.00	1.01	1.00	1.00	1.02
80	0.00	0.00	88.29	88.92	1.00	1.00	1.01	1.00	1.00	1.02
90	0.00	0.00	93.15	87.04	1.00	1.00	1.01	1.00	1.00	1.02
100	0.00	0.00	86.76	87.01	1.00	1.00	1.01	1.00	1.00	1.02
200	0.00	0.00	91.33	91.49	1.00	1.00	1.01	1.00	1.00	1.02
300	0.01	0.01	99.07	99.76	1.00	1.00	1.01	1.01	1.00	1.02
400	0.01	0.01	97.42	100.56	1.00	1.01	1.01	1.00	1.00	1.02
500	0.02	0.01	94.63	99.35	1.00	1.01	1.02	1.01	1.01	1.02
600	0.02	0.02	107.87	104.16	1.01	1.00	1.02	1.01	1.01	1.02
700	0.02	0.02	106.79	101.52	1.01	1.01	1.02	1.01	1.01	1.02
800	0.03	0.02	98.96	107.07	1.01	1.01	1.02	1.01	1.01	1.02
900	0.03	0.02	98.57	102.17	1.00	1.01	1.02	1.01	1.01	1.03
1000	0.03	0.03	103.84	105.08	1.00	1.01	1.02	1.01	1.01	1.03
1200	0.03	0.03	104.39	103.71	1.00	1.01	1.03	1.01	1.01	1.03
1400	0.04	0.04	108.43	103.24	1.00	1.01	1.03	1.01	1.01	1.03
1600	0.04	0.04	104.33	104.07	1.00	1.01	1.03	1.01	1.01	1.04
1800	0.04	0.04	101.50	106.50	1.01	1.01	1.04	1.02	1.02	1.04
2000	0.05	0.05	106.33	98.89	1.01	1.02	1.05	1.02	1.02	1.05
2200	0.05	0.05	104.38	105.50	1.02	1.02	1.05	1.02	1.02	1.05
2400	0.05	0.05	100.20	105.22	1.02	1.02	1.06	1.02	1.02	1.05
2600	0.05	0.06	101.22	96.49	1.03	1.03	1.06	1.03	1.03	1.06
2800	0.06	0.06	100.66	100.52	1.04	1.04	1.07	1.04	1.04	1.07
3000	0.06	0.06	113.93	100.28	1.04	1.04	1.08	1.04	1.03	1.08
3200	0.06	0.06	103.51	114.85	1.05	1.05	1.08	1.05	1.05	1.08
3400	0.07	0.07	103.07	98.24	1.07	1.07	1.09	1.07	1.06	1.09
3600	0.07	0.07	106.49	99.98	1.09	1.08	1.10	1.08	1.07	1.10
4000	0.08	0.08	105.17	106.44	1.11	1.10	1.11	1.12	1.10	1.11
4500	0.10	0.10	108.28	99.81	1.16	1.14	1.13	1.16	1.15	1.14
5000	0.11	0.12	106.56	100.37	1.19	1.17	1.13	1.19	1.17	1.14
5500	0.12	0.13	103.62	101.94	1.22	1.19	1.13	1.21	1.20	1.15
6000	0.13	0.13	94.74	97.50	1.22	1.20	1.12	1.21	1.21	1.14
6500	0.13	0.13	108.06	98.99	1.20	1.20	1.11	1.19	1.20	1.13
7000	0.13	0.13	94.28	101.12	1.18	1.19	1.09	1.17	1.18	1.12
7500	0.13	0.13	93.30	93.47	1.15	1.17	1.08	1.13	1.17	1.09
8000	0.13	0.13	91.10	95.74	1.13	1.15	1.08	1.12	1.16	1.09
8500	0.14	0.13	95.53	97.82	1.09	1.12	1.07	1.09	1.13	1.06
9000	0.13	0.13	90.68	93.46	1.08	1.09	1.08	1.08	1.10	1.06
9500	0.13	0.13	93.52	92.28	1.05	1.06	1.09	1.05	1.06	1.05
10000	0.13	0.13	92.92	90.47	1.06	1.05	1.10	1.06	1.06	1.06
12000	0.16	0.17	88.79	88.10	1.14	1.10	1.10	1.13	1.10	1.13
13000	0.19	0.20	88.25	88.91	1.14	1.13	1.16	1.16	1.13	1.18
14000	0.20	0.20	85.64	84.94	1.12	1.13	1.22	1.13	1.13	1.21
15000	0.22	0.21	82.28	81.89	1.13	1.13	1.25	1.11	1.13	1.21
16000	0.22	0.23	80.93	80.37	1.14	1.11	1.24	1.13	1.11	1.22
17000	0.21	0.23	80.58	80.28	1.12	1.06	1.23	1.15	1.11	1.25
18000	0.21	0.26	78.87	78.31	1.14	1.07	1.29	1.21	1.07	1.29

Notes
A. Performance and quality attributes and conditions not expressly stated in this specification document are intended to be excluded and do not form a part of this specification document.
B. Electrical specifications and performance data contained in this specification document are based on Mini-Circuit's applicable established test performance criteria and measurement instructions.
C. The parts covered by this specification document are subject to Mini-Circuits standard limited warranty and terms and conditions (collectively, "Standard Terms"); Purchasers of this part are entitled to the rights and benefits contained therein. For a full statement of the Standard Terms and the exclusive rights and remedies thereunder, please visit Mini-Circuits' website at www.minicircuits.com/MCLStore/terms.jsp

Xtra Long Life
USB/Ethernet RF SPDT RC-3SPDT-A18

Typical Performance Data

TEST CONDITIONS: @Temperature = +45degC

FREQUENCY (MHz)	INSERTION LOSS ON (dB)		ISOLATION OFF (dB)		VSWR COM (:1)		VSWR COM->2 (:1)		VSWR COM->1 (:1)	
	COM-1	COM-2	COM-1	COM-2	ON	OFF	1	2	1	2
10	0.03	0.01	92.00	96.48	1.01	1.00	1.00	1.01	1.01	1.01
20	0.01	0.01	93.10	85.54	1.00	1.00	1.00	1.00	1.00	1.01
30	0.02	0.02	87.10	86.10	1.00	1.00	1.00	1.00	1.00	1.01
40	0.02	0.02	87.44	87.32	1.00	1.00	1.00	1.00	1.00	1.01
50	0.01	0.01	85.52	89.13	1.00	1.00	1.00	1.00	1.00	1.01
60	0.00	0.01	90.49	86.10	1.00	1.00	1.00	1.00	1.00	1.01
70	0.01	0.01	90.31	94.05	1.00	1.01	1.00	1.01	1.01	1.01
80	0.01	0.01	93.43	86.17	1.01	1.01	1.00	1.01	1.01	1.01
90	0.01	0.01	94.17	86.73	1.01	1.01	1.01	1.01	1.01	1.01
100	0.01	0.01	91.90	89.83	1.01	1.01	1.01	1.01	1.01	1.01
200	0.01	0.01	98.26	103.68	1.00	1.00	1.01	1.01	1.00	1.01
300	0.01	0.02	116.76	95.71	1.01	1.01	1.00	1.00	1.01	1.01
400	0.02	0.03	99.93	105.84	1.01	1.01	1.00	1.01	1.01	1.01
500	0.02	0.03	106.09	102.44	1.01	1.01	1.01	1.01	1.01	1.01
600	0.03	0.03	112.09	103.42	1.01	1.01	1.01	1.01	1.01	1.01
700	0.03	0.03	109.00	104.63	1.01	1.01	1.01	1.01	1.01	1.01
800	0.03	0.04	108.70	102.11	1.01	1.01	1.01	1.01	1.01	1.01
900	0.03	0.04	100.99	97.92	1.01	1.01	1.01	1.01	1.01	1.02
1000	0.04	0.04	100.51	103.60	1.01	1.01	1.02	1.01	1.01	1.02
1200	0.04	0.04	106.98	101.11	1.01	1.01	1.02	1.00	1.01	1.02
1400	0.05	0.05	102.33	112.25	1.01	1.01	1.03	1.00	1.01	1.03
1600	0.05	0.05	105.28	100.38	1.01	1.00	1.04	1.01	1.01	1.03
1800	0.05	0.05	98.73	107.35	1.01	1.01	1.04	1.01	1.01	1.04
2000	0.06	0.06	115.46	117.46	1.02	1.01	1.05	1.02	1.01	1.04
2200	0.06	0.06	103.28	108.02	1.03	1.01	1.06	1.01	1.01	1.05
2400	0.07	0.07	101.81	102.85	1.03	1.03	1.06	1.03	1.03	1.06
2600	0.07	0.07	103.07	96.44	1.03	1.04	1.07	1.04	1.04	1.06
2800	0.07	0.07	105.69	102.56	1.04	1.03	1.08	1.04	1.04	1.07
3000	0.07	0.08	98.32	99.97	1.05	1.04	1.09	1.04	1.05	1.08
3200	0.08	0.08	93.90	99.83	1.06	1.07	1.09	1.06	1.07	1.08
3400	0.09	0.09	109.17	105.95	1.07	1.09	1.11	1.08	1.09	1.09
3600	0.09	0.09	95.19	113.30	1.09	1.08	1.11	1.07	1.09	1.09
4000	0.10	0.10	99.68	98.18	1.12	1.13	1.12	1.11	1.14	1.11
4500	0.11	0.11	101.53	99.11	1.15	1.14	1.12	1.12	1.15	1.11
5000	0.14	0.13	99.42	101.94	1.16	1.20	1.14	1.17	1.20	1.13
5500	0.14	0.14	100.62	95.58	1.20	1.19	1.13	1.16	1.20	1.12
6000	0.15	0.15	94.60	100.65	1.18	1.20	1.13	1.18	1.20	1.13
6500	0.15	0.15	98.83	97.47	1.15	1.18	1.11	1.17	1.18	1.12
7000	0.15	0.15	96.84	95.86	1.16	1.14	1.10	1.15	1.15	1.11
7500	0.16	0.16	99.59	95.52	1.10	1.15	1.08	1.14	1.14	1.10
8000	0.15	0.16	100.42	100.22	1.12	1.09	1.07	1.11	1.10	1.08
8500	0.17	0.17	95.86	97.28	1.08	1.10	1.08	1.11	1.09	1.09
9000	0.17	0.18	99.29	91.93	1.06	1.10	1.07	1.07	1.07	1.08
9500	0.17	0.18	92.32	94.80	1.08	1.04	1.06	1.03	1.04	1.08
10000	0.18	0.19	100.99	93.19	1.03	1.10	1.07	1.06	1.08	1.09
12000	0.23	0.25	88.28	90.17	1.19	1.18	1.18	1.15	1.19	1.15
13000	0.26	0.28	89.01	88.66	1.23	1.23	1.26	1.18	1.23	1.21
14000	0.26	0.28	86.21	87.49	1.12	1.18	1.29	1.15	1.16	1.25
15000	0.26	0.28	84.10	86.03	1.01	1.11	1.25	1.10	1.09	1.23
16000	0.28	0.32	81.63	84.68	1.04	1.08	1.21	1.08	1.08	1.18
17000	0.27	0.32	80.37	84.83	1.05	1.07	1.30	1.11	1.11	1.20
18000	0.30	0.35	79.19	82.41	1.24	1.14	1.37	1.15	1.18	1.22

Notes
A. Performance and quality attributes and conditions not expressly stated in this specification document are intended to be excluded and do not form a part of this specification document.
B. Electrical specifications and performance data contained in this specification document are based on Mini-Circuit's applicable established test performance criteria and measurement instructions.
C. The parts covered by this specification document are subject to Mini-Circuits standard limited warranty and terms and conditions (collectively, "Standard Terms"); Purchasers of this part are entitled to the rights and benefits contained therein. For a full statement of the Standard Terms and the exclusive rights and remedies thereunder, please visit Mini-Circuits' website at www.minicircuits.com/MCLStore/terms.jsp

Mini-Circuits®
www.minicircuits.com P.O. Box 35166, Brooklyn, NY 11235-0003 (718) 934-4500 sales@minicircuits.com

Xtra Long Life
USB/Ethernet RF SPDT Switch RC-3SPDT-A18

Typical Performance Curves

Insertion Loss
Temperature = 0°C

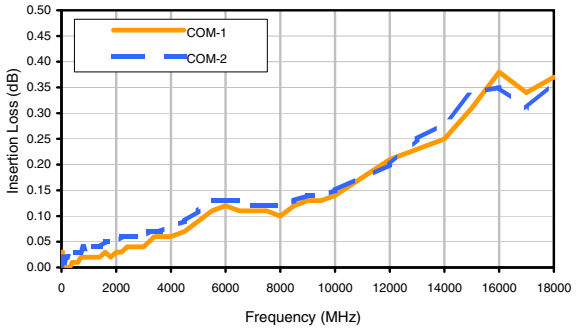

Isolation
Temperature = 0°C

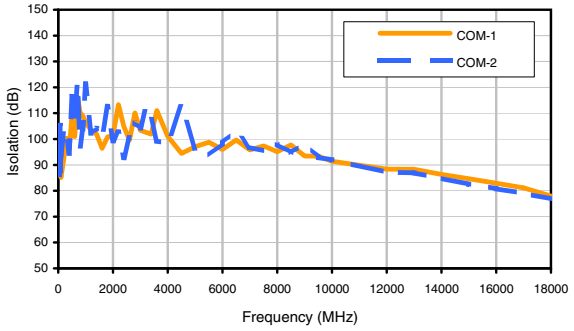

VSWR COM->2
Temperature = 0°C

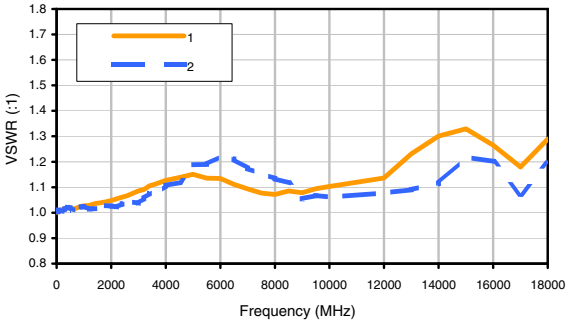

VSWR COM->1
Temperature = 0°C

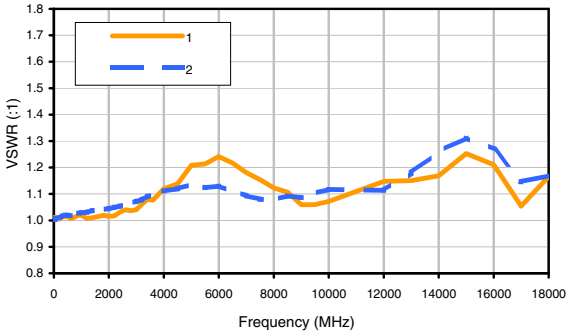

VSWR COM
Temperature = 0°C

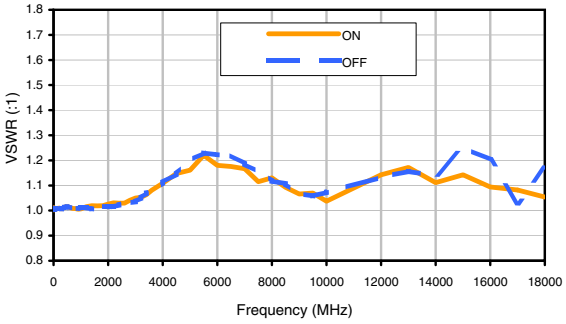

Notes
A. Performance and quality attributes and conditions not expressly stated in this specification document are intended to be excluded and do not form a part of this specification document.
B. Electrical specifications and performance data contained in this specification document are based on Mini-Circuit's applicable established test performance criteria and measurement instructions.
C. The parts covered by this specification document are subject to Mini-Circuits standard limited warranty and terms and conditions (collectively, "Standard Terms"); Purchasers of this part are entitled to the rights and benefits contained therein. For a full statement of the Standard Terms and the exclusive rights and remedies thereunder, please visit Mini-Circuits' website at www.minicircuits.com/MCLStore/terms.jsp

Xtra Long Life
USB/Ethernet RF SPDT Switch RC-3SPDT-A18

Typical Performance Curves

IInsertion Loss
Temperature = +25°C

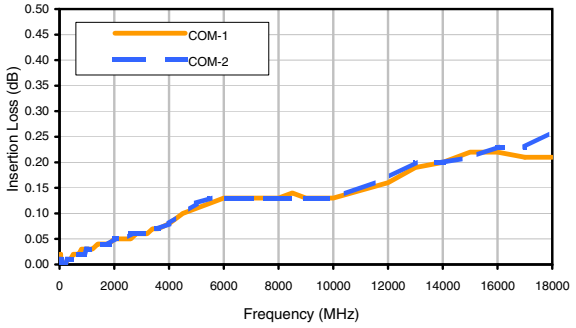

Isolation
Temperature = +25°C

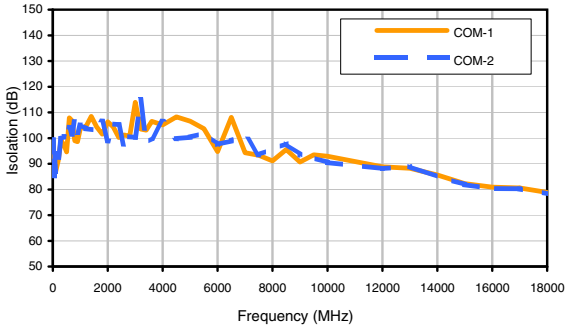

VSWR COM->2
Temperature = +25°C

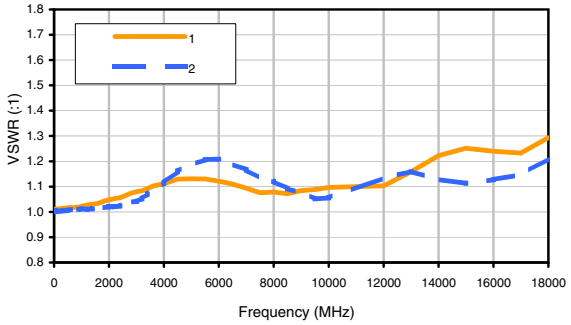

VSWR COM->1
Temperature = +25°C

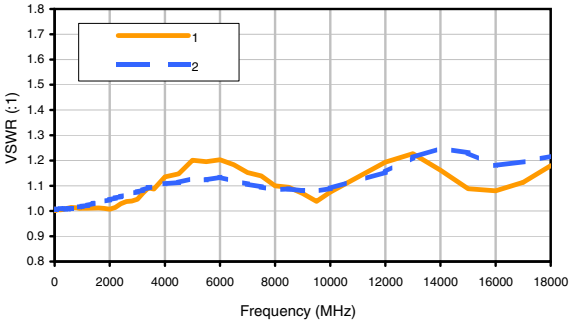

VSWR COM
Temperature = +25°C

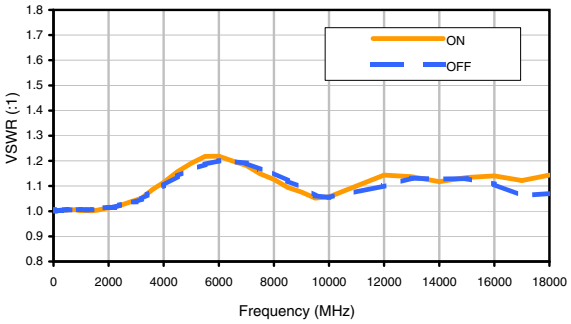

Notes
A. Performance and quality attributes and conditions not expressly stated in this specification document are intended to be excluded and do not form a part of this specification document.
B. Electrical specifications and performance data contained in this specification document are based on Mini-Circuit's applicable established test performance criteria and measurement instructions.
C. The parts covered by this specification document are subject to Mini-Circuits standard limited warranty and terms and conditions (collectively, "Standard Terms"); Purchasers of this part are entitled to the rights and benefits contained therein. For a full statement of the Standard Terms and the exclusive rights and remedies thereunder, please visit Mini-Circuits' website at www.minicircuits.com/MCLStore/terms.jsp

Xtra Long Life
USB/Ethernet RF SPDT Switch RC-3SPDT-A18

Typical Performance Curves

Insertion Loss
Temperature = +45°C

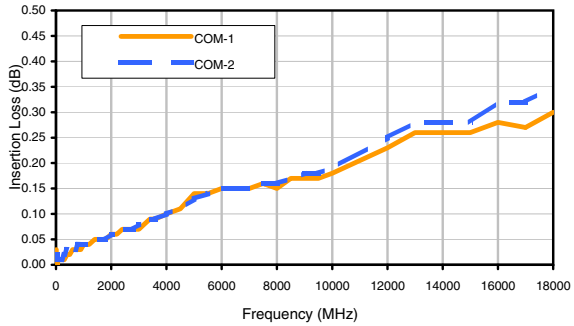

Isolation
Temperature = +45°C

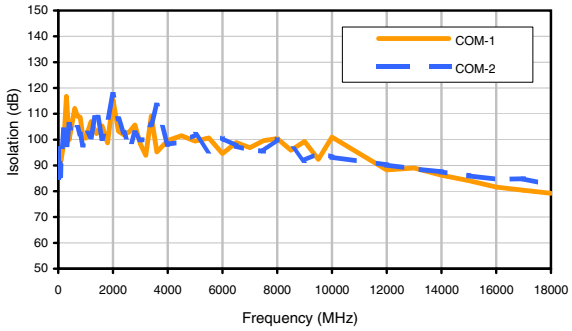

VSWR COM->2
Temperature = +45°C

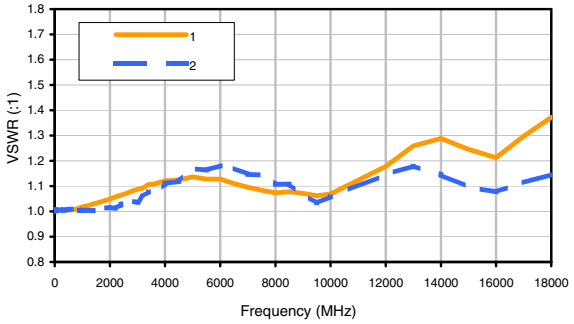

VSWR COM->1
Temperature = +45°C

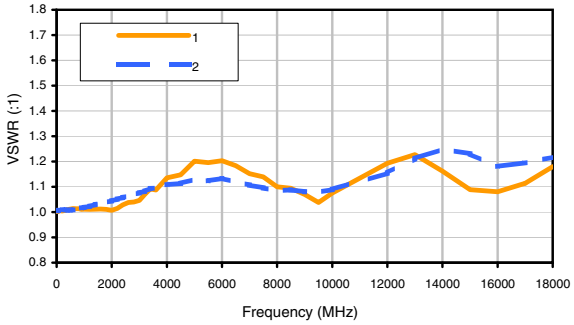

VSWR COM
Temperature = +45°C

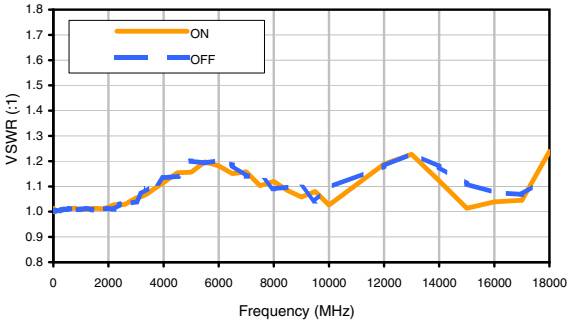

Notes
A. Performance and quality attributes and conditions not expressly stated in this specification document are intended to be excluded and do not form a part of this specification document.
B. Electrical specifications and performance data contained in this specification document are based on Mini-Circuit's applicable established test performance criteria and measurement instructions.
C. The parts covered by this specification document are subject to Mini-Circuits standard limited warranty and terms and conditions (collectively, "Standard Terms"); Purchasers of this part are entitled to the rights and benefits contained therein. For a full statement of the Standard Terms and the exclusive rights and remedies thereunder, please visit Mini-Circuits' website at www.minicircuits.com/MCLStore/terms.jsp

Case Style LM

Outline Dimensions

LM1850

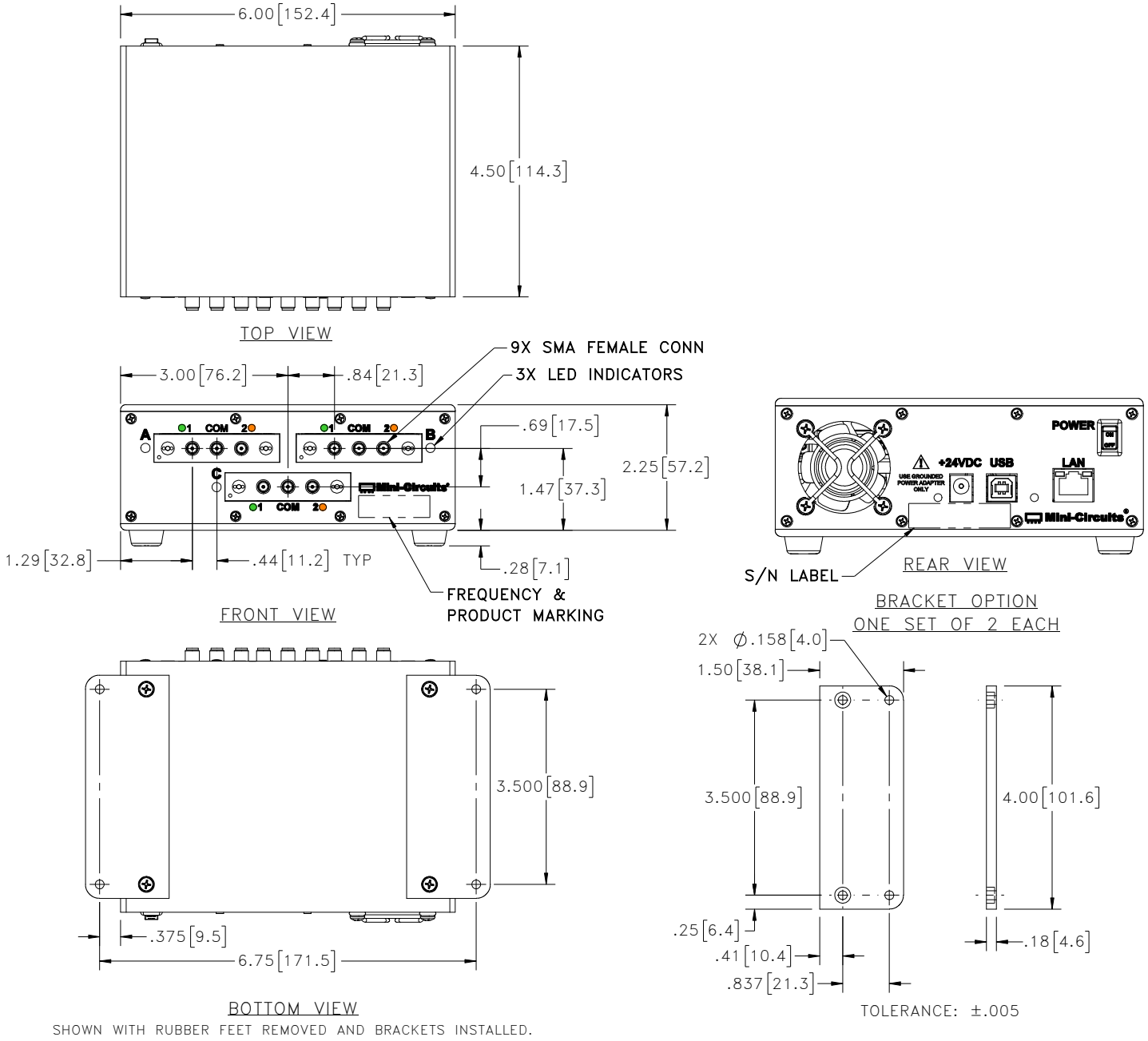

INSTRUCTIONS FOR MOUNTING BRACKETS: TOOL REQUIRED: PHILLIPS HEAD SCREWDRIVER
STEP 1: REMOVE RUBBER FEET FROM THE BOTTOM OF THE UNIT, DO NOT DISCARD THE FASTENERS.
STEP 2: MOUNT THE BRACKETS WITH THE FASTENERS REMOVED IN STEP 1, USING THE COUNTER BORE HOLES IN THE BRACKET.

Notes:

1. Case material: Aluminum (with protective coating to prevent corrosion).
2. Dimensions are in inches [mm]. Tolerances: 2 Pl. ±.03 inch; 3 Pl. ±.015 inch.
3. Weight: 1075 grams.
4. Marking may contain other features or characters for internal lot control.

Mini-Circuits®
ISO 9001 ISO 14001 CERTIFIED
ALL NEW minicircuits.com
P.O. Box 350166, Brooklyn, New York 11235-0003 (718) 934-4500 Fax (718) 332-4661 For detailed performance specs & shopping online see Mini-Circuits web site
The Design Engineers Search Engine Provides ACTUAL Data Instantly From MINI-CIRCUITS At: www.minicircuits.com
RF/IF MICROWAVE COMPONENTS

This document and its contents are the property of Mini-Circuits

Mini-Circuits

Environmental Specifications ENV104

All Mini-Circuits products are manufactured under exacting quality assurance and control standards, and are capable of meeting published specifications after being subjected to any or all of the following physical and environmental test.

Specification	Test/Inspection Condition	Reference/Spec
Operating Temperature	0° to 40° C Ambient Environment	Individual Model Data Sheet
Storage Temperature	-15° to 85°C Ambient Environment	Individual Model Data Sheet
Operating and Storage Humidity	5% to 85% RH (non-condensing)	Ambient
Bench Handling Test	Bench Top Tip 45° & Drop	MIL-PRF-28800F
Transit Drop Test	Free Fall Drop, 20 cm (7.9 inches)	MIL-PRF-28800F class 3

This document and its contents are the property of Mini-Circuits.