Surface Mount

RF Transformer

50Ω 0.015 to 300 MHz

T1-6T+

Generic photo used for illustration purposes only

CASE STYLE: W38

+RoHS Compliant

The +Suffix identifies RoHS Compliance. See our web site for RoHS Compliance methodologies and qualifications

Maximum Ratings

Operating Temperature	-20°C to 85°C
Storage Temperature	-55°C to 100°C
RF Power	0.25W
DC Current	30mA

Permanent damage may occur if any of these limits are exceeded.

Pin Connections

PRIMARY DOT	4
PRIMARY	6
SECONDARY DOT	3
SECONDARY	1
SECONDARY CT	2
NOT USED	5

Features

- wideband, 0.015 to 300 MHz
- excellent return loss
- also available with surface mount gull wing (KK81) plug-in (X65) leads

Applications

- VHF/UHF receivers/transmitters
- impedance matching

Transformer Electrical Specifications

Ω RATIO	FREQUENCY (MHz)	INSERTION LOSS*		
		3 dB MHz	2 dB MHz	1 dB MHz
1	0.015-300	0.015-300	0.021-150	0.03-50

*Insertion Loss is referenced to mid-band loss, 0.1 dB typ.

Outline Drawing

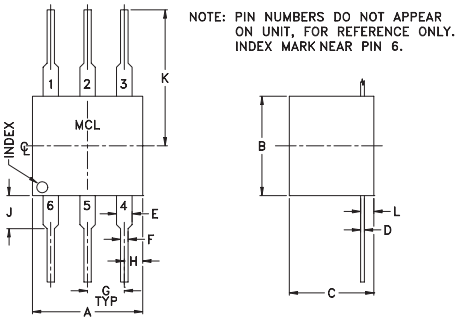

Outline Dimensions (inch / mm)

A	B	C	D	E	F
.30	.27	.23	.010	.042	.020
7.62	6.86	5.84	0.25	1.07	0.51

G	H	J	K	L	wt
.100	.05	.09	.31	.036	grams
2.54	1.27	2.29	7.87	0.91	0.50

Typical Performance Data

FREQUENCY (MHz)	INSERTION LOSS (dB)	INPUT R. LOSS (dB)
0.02	1.24	11.77
0.13	0.21	26.45
1.15	0.12	37.26
47.47	0.40	19.27
111.99	0.66	14.92
147.83	0.74	14.64
175.75	0.75	15.08
209.75	0.77	16.64
250.25	0.84	20.06
300.00	1.09	26.64

Config. A

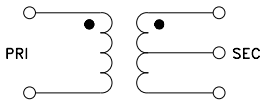

INSERTION LOSS

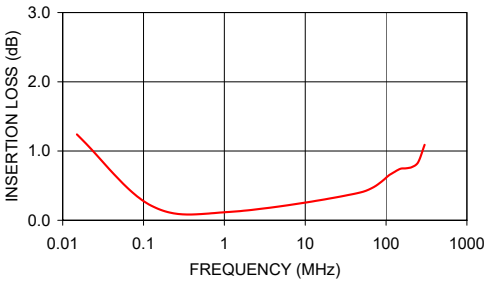

INPUT RETURN LOSS

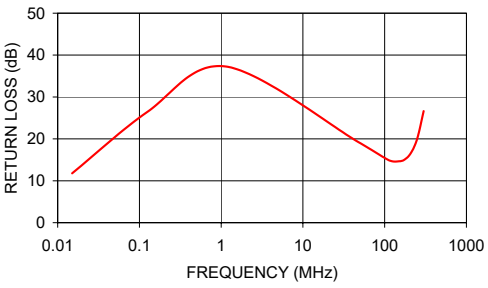

Notes

A. Performance and quality attributes and conditions not expressly stated in this specification document are intended to be excluded and do not form a part of this specification document.

B. Electrical specifications and performance data contained in this specification document are based on Mini-Circuit's applicable established test performance criteria and measurement instructions.

C. The parts covered by this specification document are subject to Mini-Circuits standard limited warranty and terms and conditions (collectively, "Standard Terms"); Purchasers of this part are entitled to the rights and benefits contained therein. For a full statement of the Standard Terms and the exclusive rights and remedies thereunder, please visit Mini-Circuits' website at www.minicircuits.com/MCLStore/terms.jsp

Mini-Circuits®

www.minicircuits.com P.O. Box 350166, Brooklyn, NY 11235-0003 (718) 934-4500 sales@minicircuits.com

Typical Performance Data

FREQUENCY (MHz)	INSERTION LOSS (dB)	RETURN LOSS (dB)
0.02	1.24	11.77
0.13	0.21	26.45
1.15	0.12	37.26
47.47	0.40	19.27
111.99	0.66	14.92
147.83	0.74	14.64
175.75	0.75	15.08
209.75	0.77	16.64
250.25	0.84	20.06
300.00	1.09	26.64

Typical Performance Curves

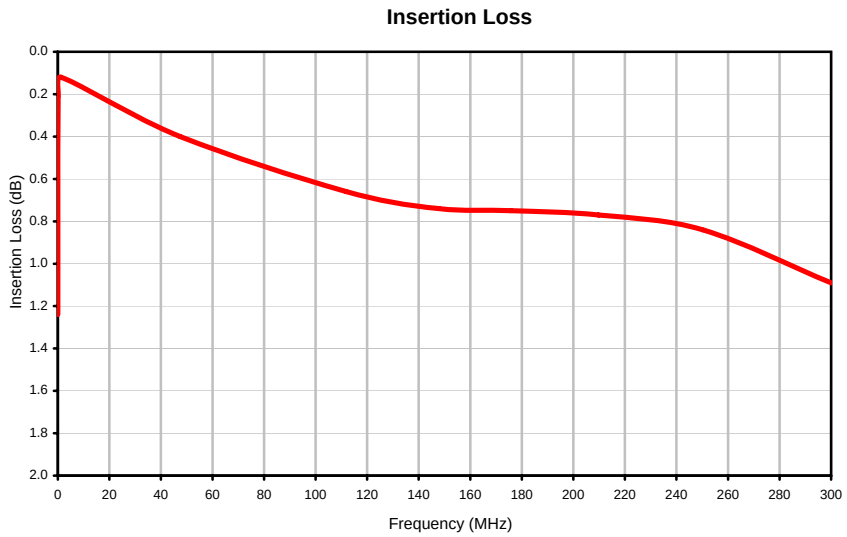

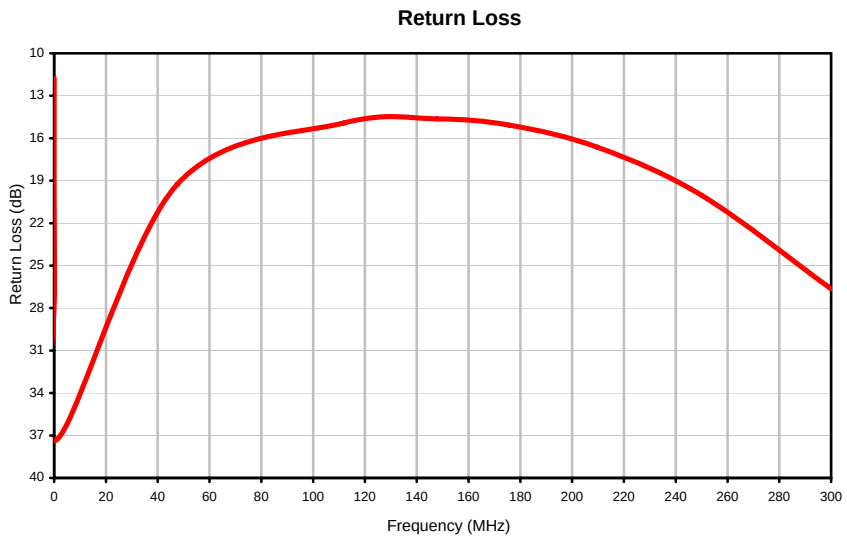

Case Style W

Outline Dimensions

W38

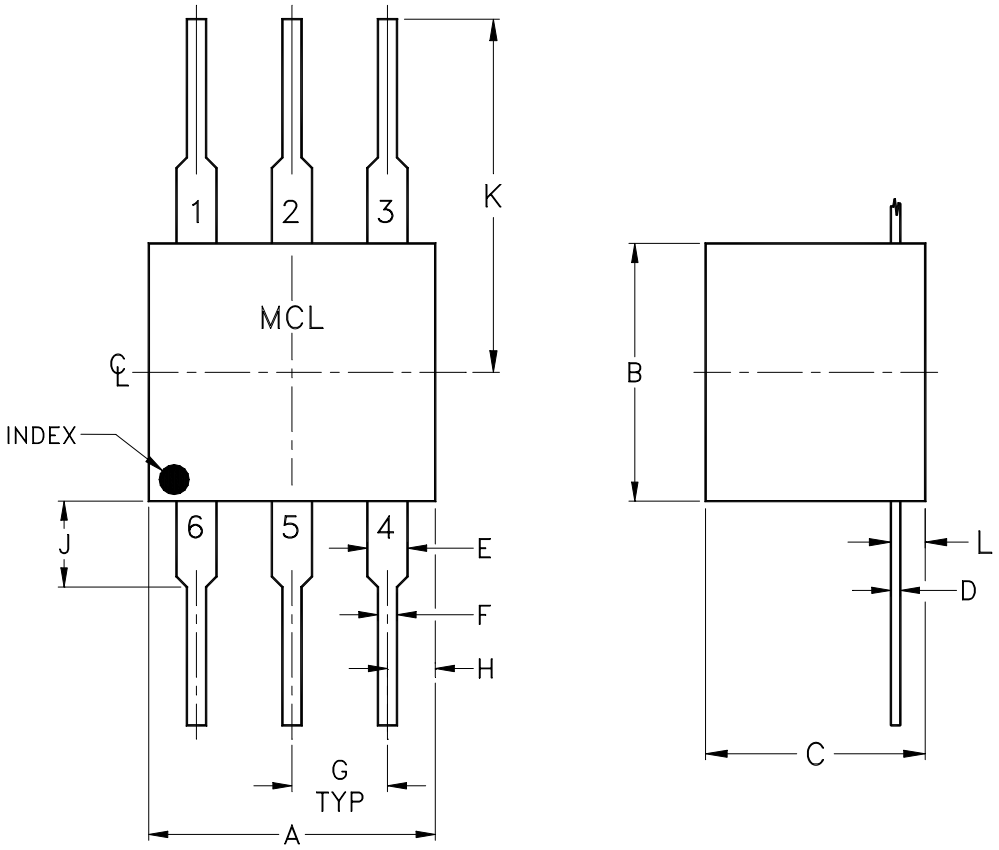

CASE #	A	B	C	D	E	F	G	H	J	K	L	WT. GRAM
W38	.30 (7.62)	.27 (6.86)	.23 (5.84)	.010 (0.25)	.042 (1.07)	.020 (0.51)	.100 (2.54)	.05 (1.27)	.09 (2.29)	.31 (7.87)	.036 (0.91)	.50

Dimensions are in inches (mm). Tolerances: 2Pl. ± .03; 3 Pl. ± .015.

Notes:

1. Case material: Plastic.
   Termination finish: For RoHS Case Styles: Tin Plate over Nickel Plate.
   For RoHS-5 Case Styles: Tin-Lead Plate.

Mini-Circuits®
INTERNET http://www.minicircuits.com
P.O. Box 350166, Brooklyn, New York 11235-0003 (718) 934-4500 Fax (718) 332-4661
Distribution Centers NORTH AMERICA 800-654-7949 • 417-335-5935 • Fax 417-335-5945 • EUROPE 44-1252-832600 • Fax 44-1252-837010
Mini-Circuits ISO 9001 & ISO 14001 Certified

This document and its contents are the property of Mini-Circuits

Mini-Circuits

Environmental Specifications ENV19

All Mini-Circuits products are manufactured under exacting quality assurance and control standards, and are capable of meeting published specifications after being subjected to any or all of the following physical and environmental test.

Specification	Test/Inspection Condition	Reference/Spec
Operating Temperature	-20° to 85°C Ambient Environment	Individual Model Data Sheet
Storage Temperature	-55° to 100° C Ambient Environment	Individual Model Data Sheet
Thermal Shock	-55° to 100°C, 100 cycles	MIL-STD-202, Method 107, Condition A-3, except +100°C
Solder Reflow Heat	Sn-Pb Eutetic Process: 225°C peak Pb-Free Process 245° - 250°C peak	J-STD-020, Table 4-1, 4-2 and 5-2, Figure 5-1
Solderability	10X Magnification	J-STD-002, Para 4.2.5, Test S, 95% Coverage
Vibration (High Frequency)	20g peak, 10-2000 Hz, 12 times in each of three perpendicular directions (total 36)	MIL-STD-202, Method 204, Condition D
Mechanical Shock	50g, 11 ms, 1/2-sine, 18 shocks: 3 each direction, each of 3 axes	MIL-STD-202, Method 213, Condition A
Lead Integrity	2 Pound Pull, perpendicular to edge of unit	MIL-STD-202, Method 211, Condition A
Marking Resistance to Solvents	Isopropyl alcohol + mineral spirits at 25°C; terpene defluxer at 25°C; distilled water + proylene glycol monomethyl ether + monoethanolamine at 63°C to 70°C	MIL-STD-202, Method 215

This document and its contents are the property of Mini-Circuits.