Evaluation Board and Circuit

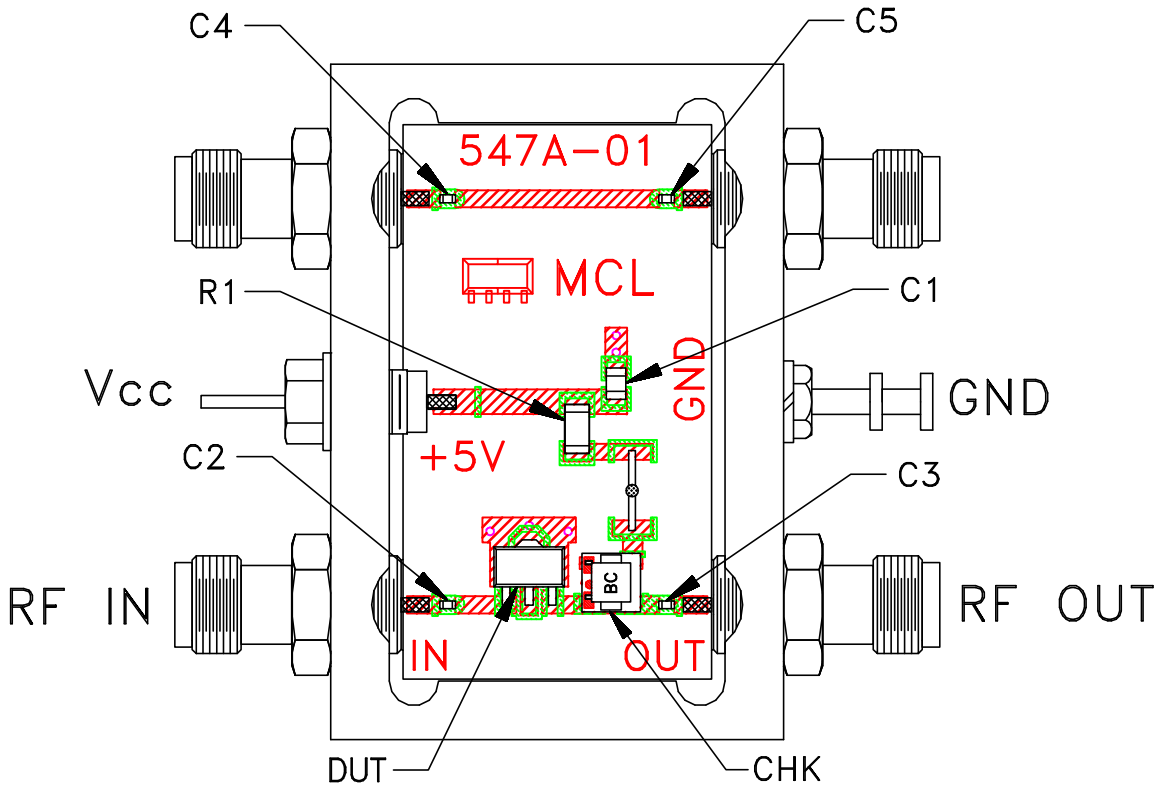

TB-545-1H+

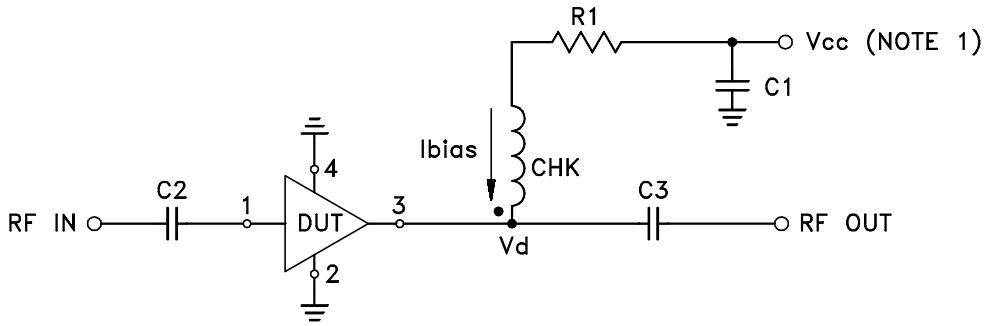

COMPONENT	VALUE
DUT	PHA-1H+
C1 (bypass)	0.1 uF
C2-C5 (Note 4)	0.001 uF
R1	0 Ohm, 0.25W
CHK	Mini-Circuits TCCH-80+

Schematic Diagram

NOTES:

1. Vcc voltage: +5±0.2V.
2. SMA Female connectors.
3. PCB material: Rogers RO4350 or equivalent, dielectric constant=3.5, dielectric thickness=.020 inch.
4. Capacitor C2-C5 should be free of resonance up to the highest frequency specified.

Mini-Circuits®