Evaluation Board and Circuit

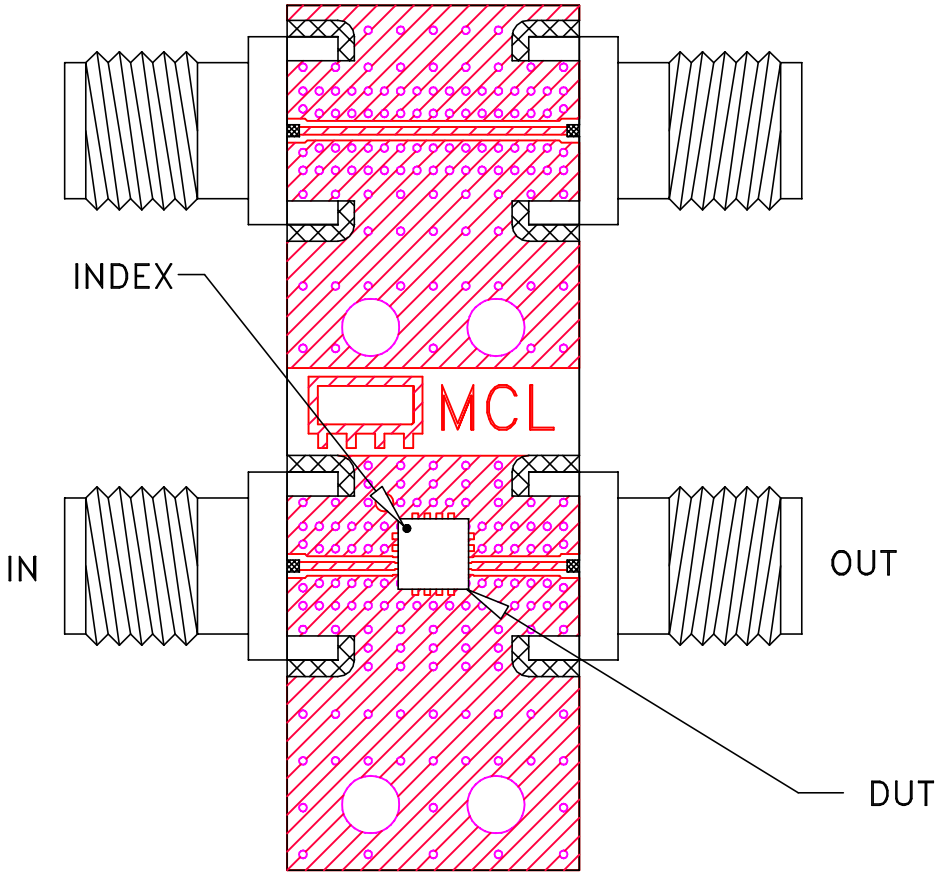

TB-967-63M+

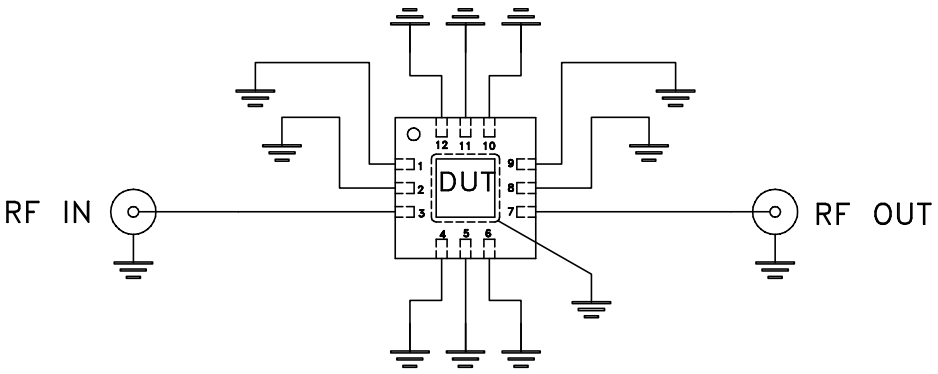

Schematic Diagram

1. 50 Ohm SMA Female connectors.
2. PCB Material: RO4003 or equivalent,
   Dielectric Constant=3.5, Thickness=.008 inch.

Mini-Circuits®

THIS DOCUMENT AND ITS CONTENTS ARE THE PROPERTY OF MINI-CIRCUITS.