Evaluation Board and Circuit

For Pin Connections refer to Data Sheet of the DUT

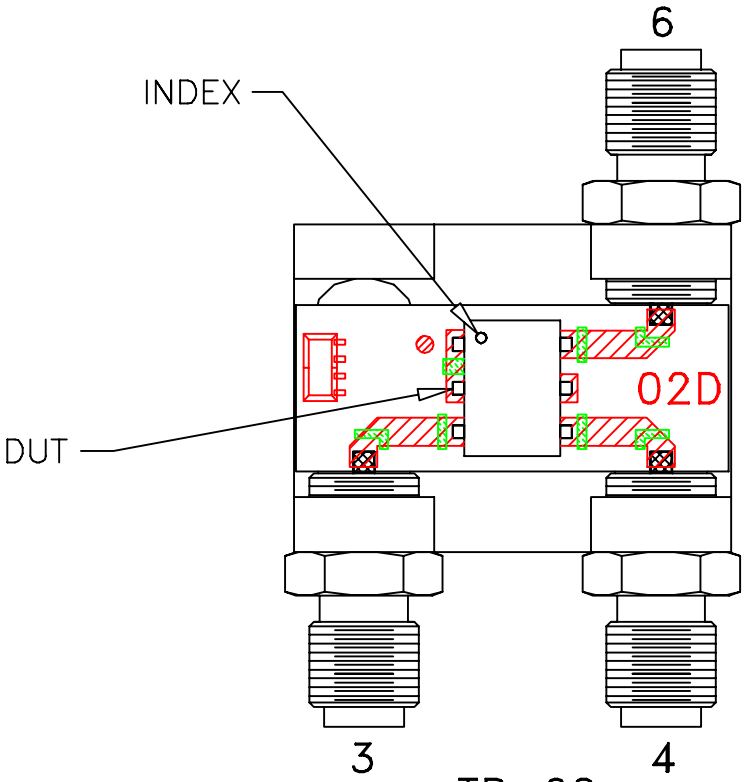

TB–02

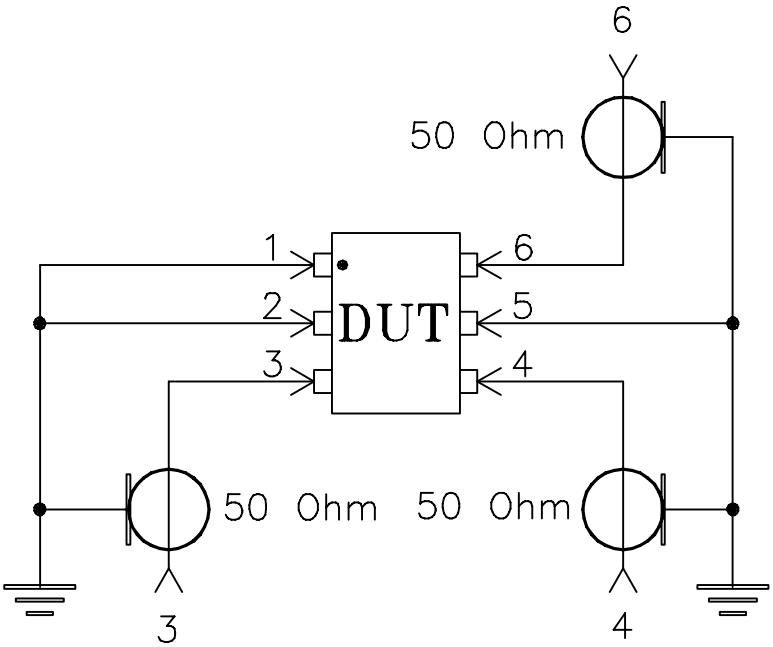

Schematic Diagram

Notes:

1. SMA Female connectors.
2. PCB Material: Rogers RO4350 or equivalent, Dielectric Constant=3.5, Thickness=.030 inch.

Mini–Circuits®

THIS DOCUMENT AND ITS CONTENTS ARE THE PROPERTY OF MINI–CIRCUITS.