# Evaluation Board and Circuit

For Pin Connections refer to Data Sheet of the DUT

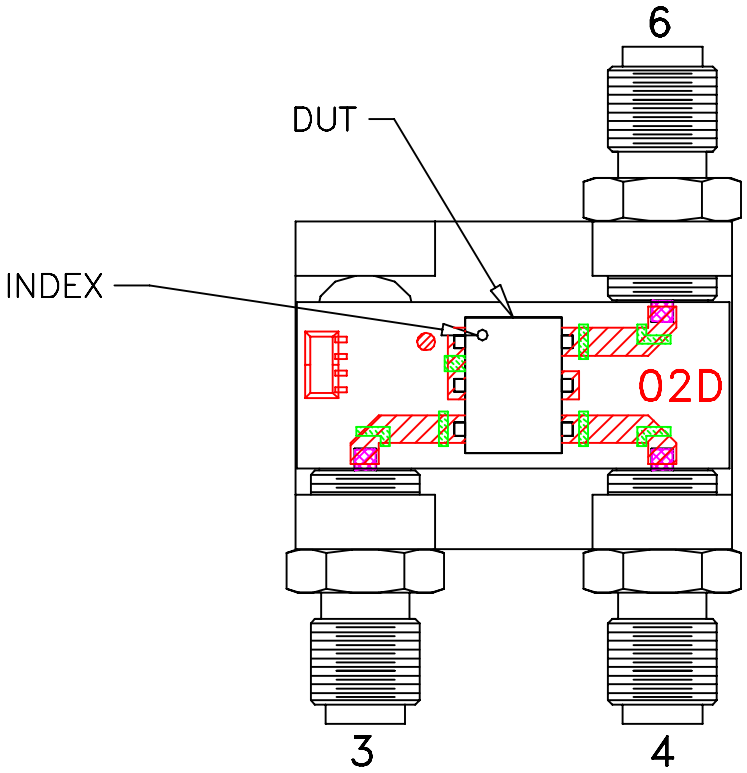


TB-430

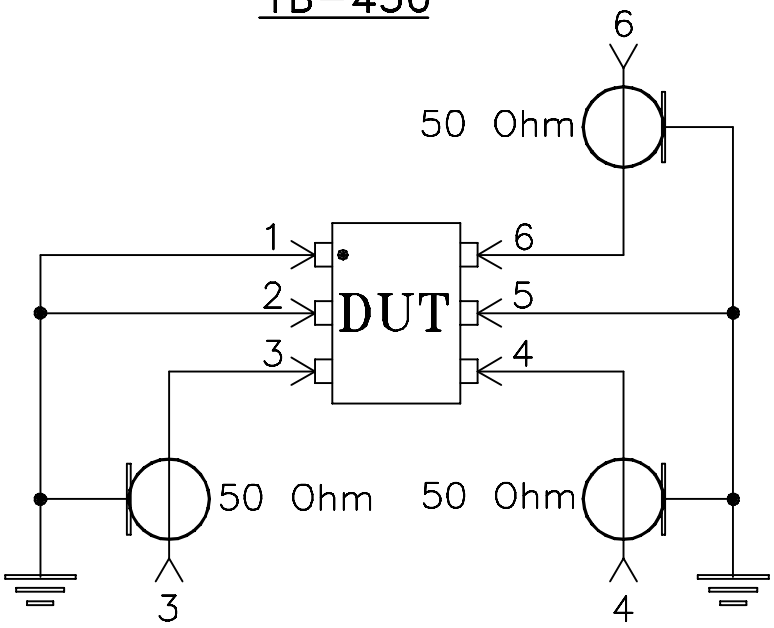


Schematic Diagram

## Notes:

1. SMA Female connectors.
2. PCB Material: Rogers RO4350 or equivalent, Dielectric Constant=3.5, Thickness=.030 inch.
3. Must use ENA/PNA type agilent's network analyzers with impedance conversion option to convert ports to appropriate impedances.

Mini-Circuits®


THIS DOCUMENT AND ITS CONTENTS ARE THE PROPERTY OF MINI-CIRCUITS.