Evaluation Board and Circuit

For Pin Connections refer to Data Sheet of the DUT

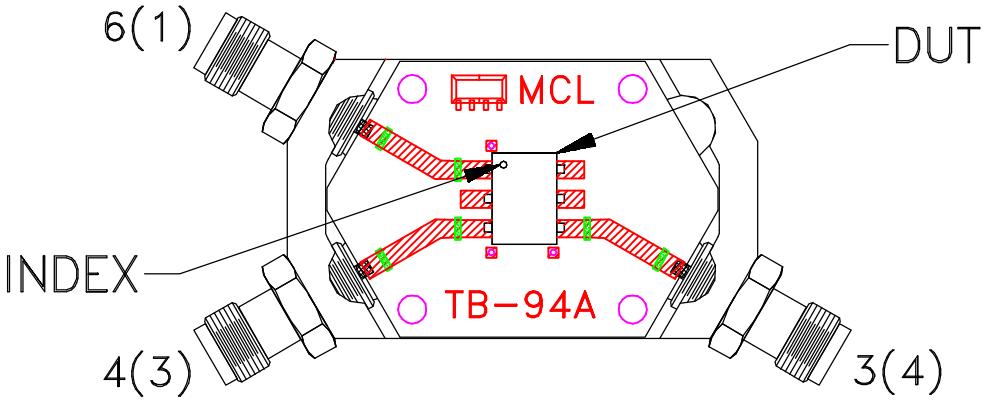

TB-94

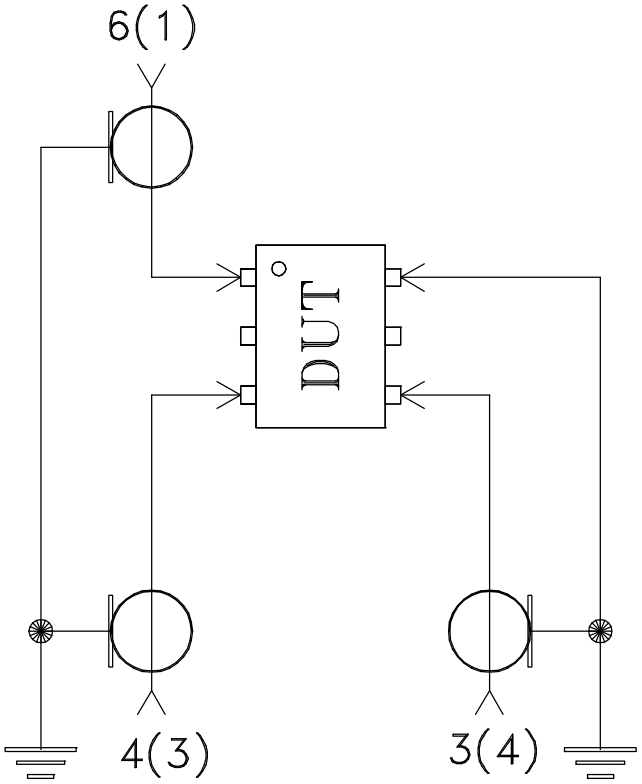

Schematic Diagram

Notes:

1. SMA Female connectors.
2. PCB Material: Rogers RO4350 or equivalent, Dielectric Constant=3.5, Thickness=.030 inch.
3. Port Identifications are given for Case Styles QQQ130/569 and CD542 (in parenthesis).

Mini-Circuits®

THIS DOCUMENT AND ITS CONTENTS ARE THE PROPERTY OF MINI-CIRCUITS.