Evaluation Board and Circuit

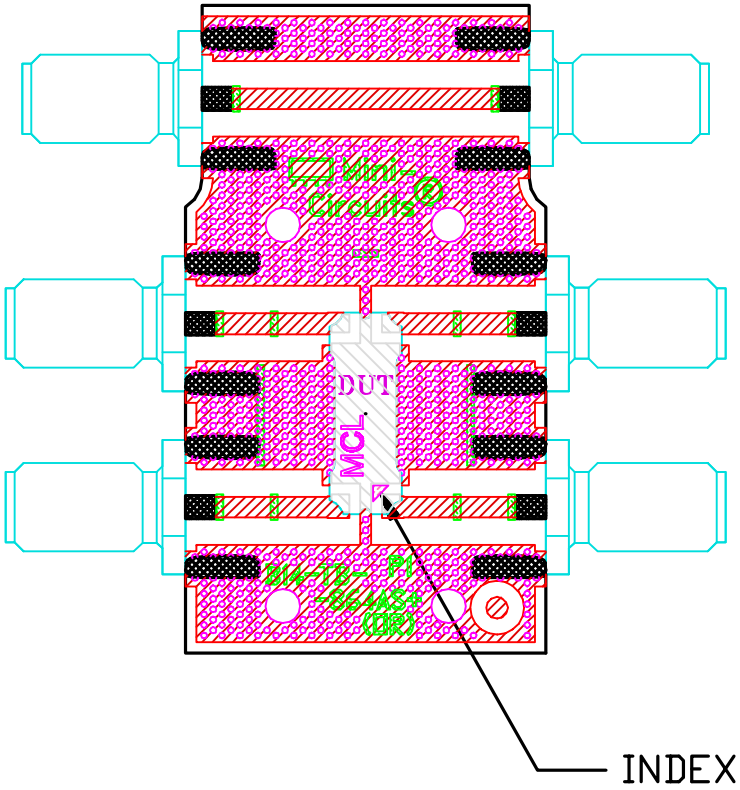

TB-864+

NOTES:

1. SMA FEMALE CONNECTORS.
2. PCB MATERIAL: ROGERS RT/DUROID 5880 OR EQUIVALENT,
   DIELECTRIC CONSTANT=2.2, DIELECTRIC THICKNESS=.020 INCH.

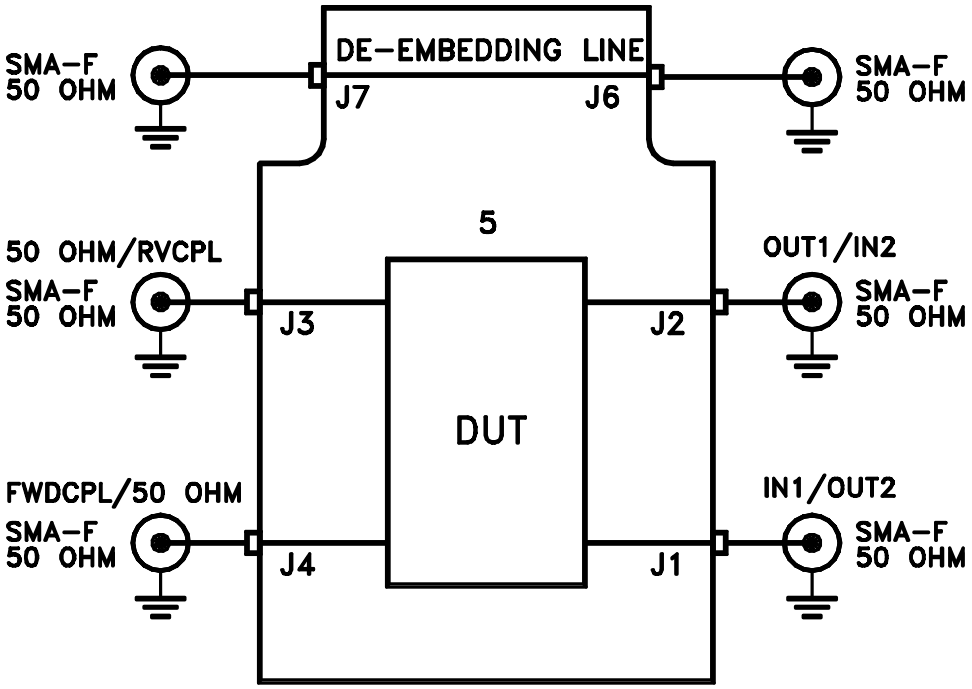

TB-864+
Schematic Diagram

THIS DOCUMENT AND ITS CONTENTS ARE THE PROPERTY OF MINI-CIRCUITS.