Evaluation Board and Circuit

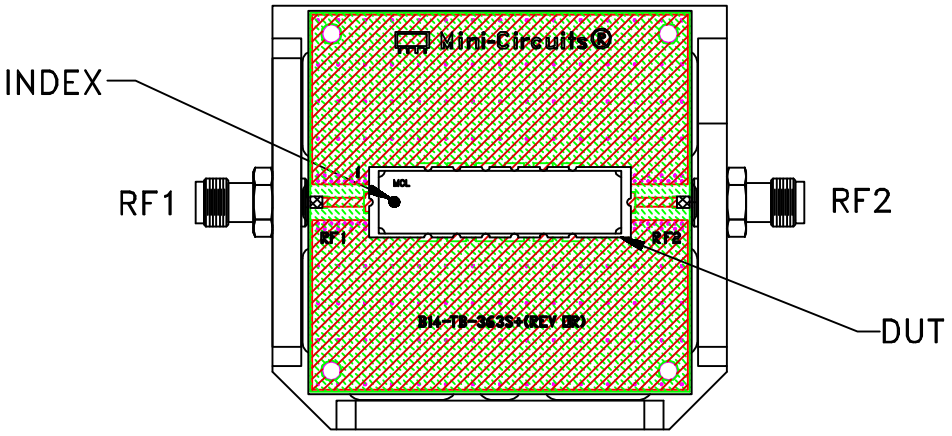

TB–363+

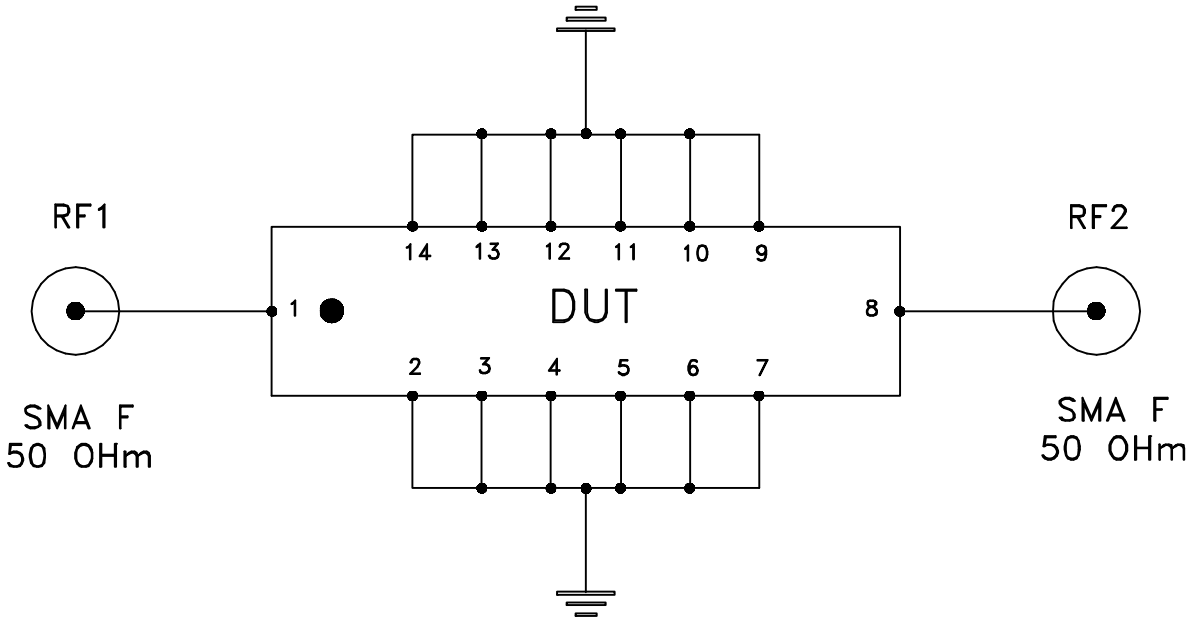

Schematic Diagram

Notes:
1. 50 Ohm SMA Female connectors.
2. PCB Material: ROGERS R04350 or equivalent, Dielectric Constant=3.48, Thickness=.030 inch.

Mini–Circuits®