Evaluation Board and Circuit

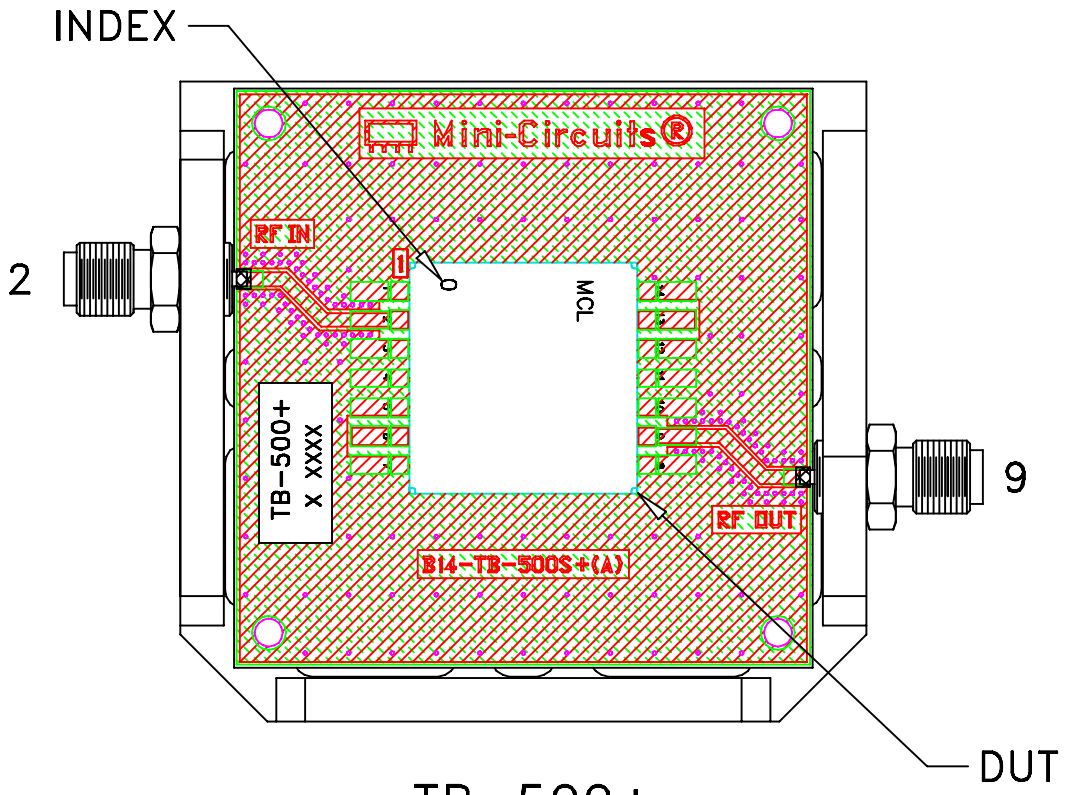

TB-500+

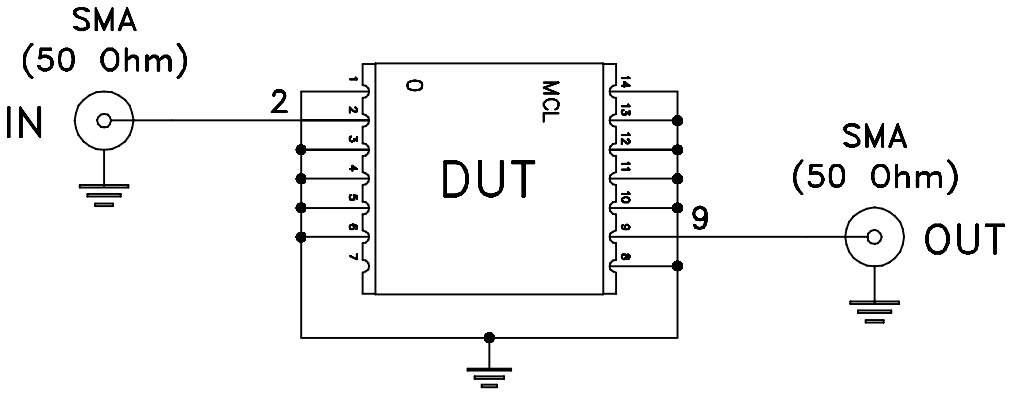

Schematic Diagram

Notes:

1. 50 Ohm SMA Female connectors.
2. PCB Material: RO4350 or equivalent.
   Dielectric Constant=3.5, Thickness=.030 inch.

Mini-Circuits®

THIS DOCUMENT AND ITS CONTENTS ARE THE PROPERTY OF MINI-CIRCUITS.