Evaluation Board and Circuit

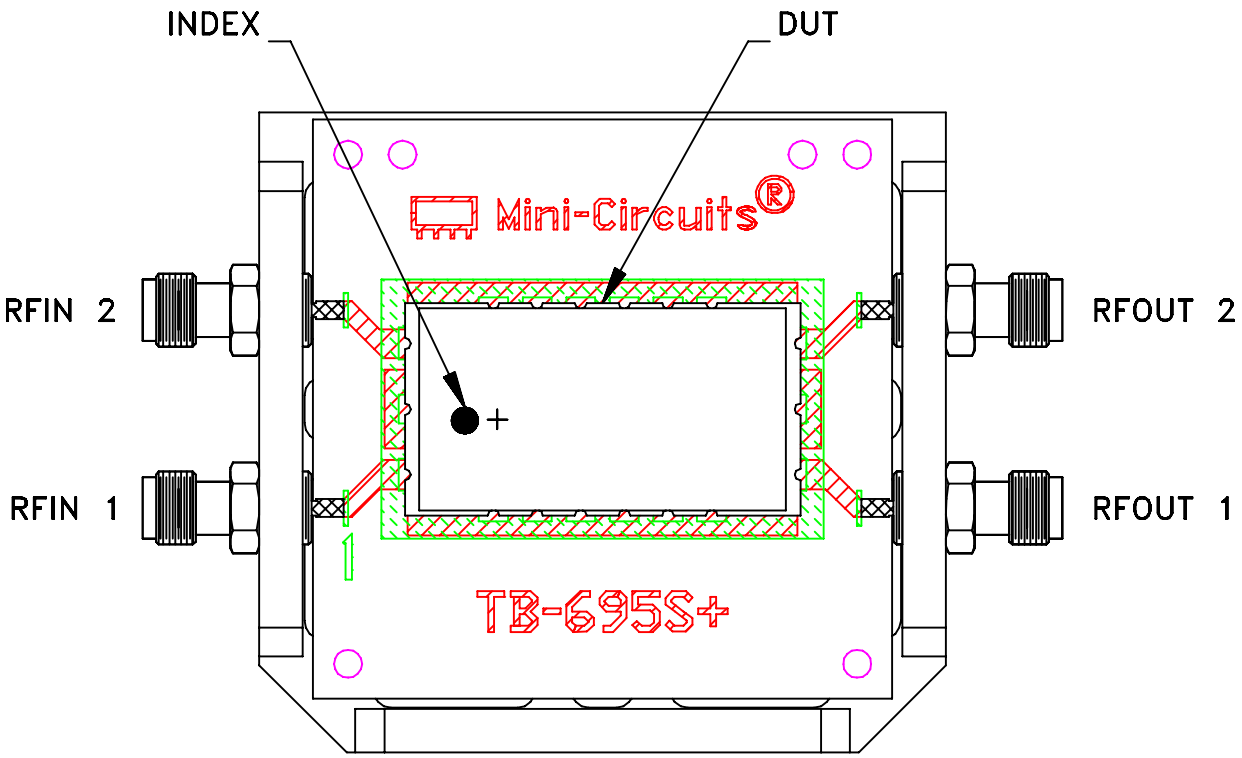

TB-695+

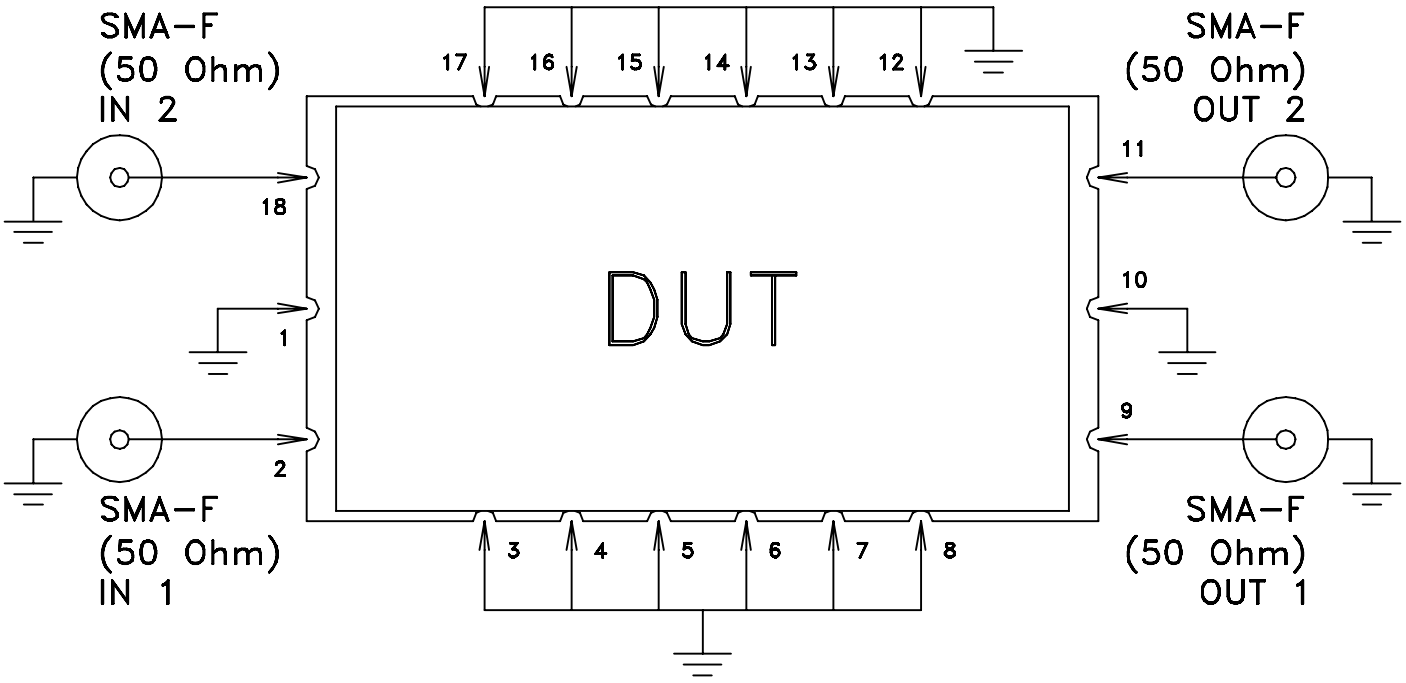

Schematic Diagram

Notes:

1. 50 Ohm SMA Female connectors.
2. PCB Material: OAK-602 OR Equivalent
   Dielectric Constant=2.50±.04, Thickness=.022 inch.

Mini-Circuits®

THIS DOCUMENT AND ITS CONTENTS ARE THE PROPERTY OF MINI-CIRCUITS.