Evaluation Board and Circuit

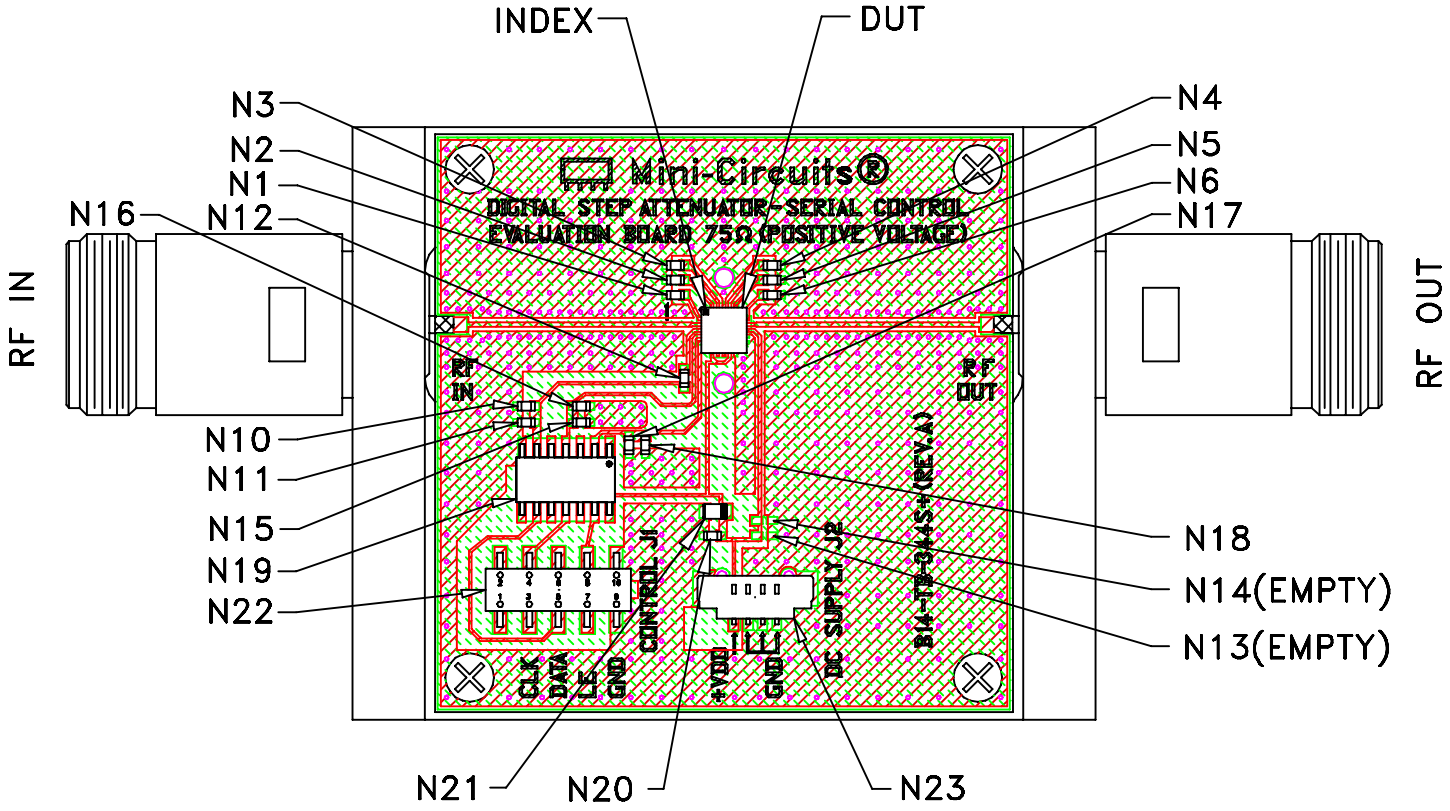

TB–344

Notes:

1. N–Type Female connectors.
2. PCB Material: FR4 Grade IT 180TC (ITEQ Corporation) or equivalent, Dielectric Constant=4.7, Thickness=.025 inch.

Mini–Circuits®