Evaluation Board and Circuit

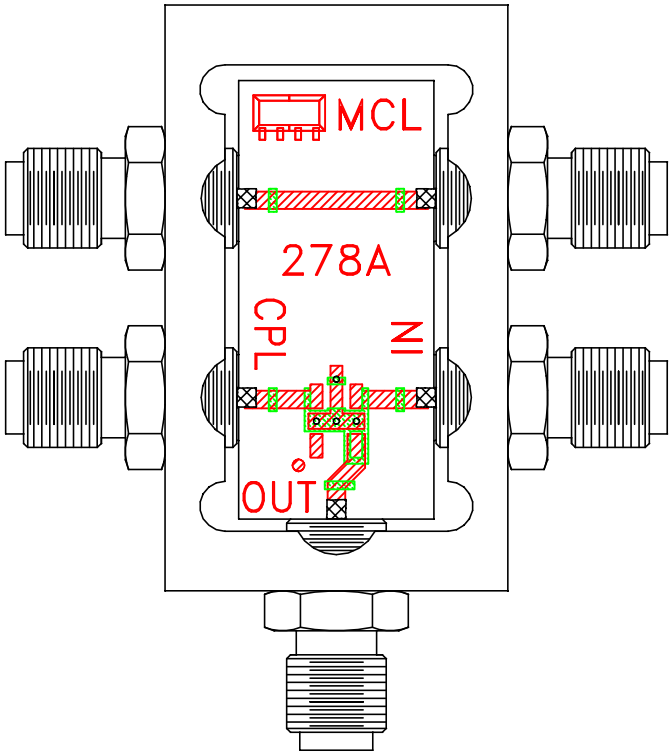

TB-278

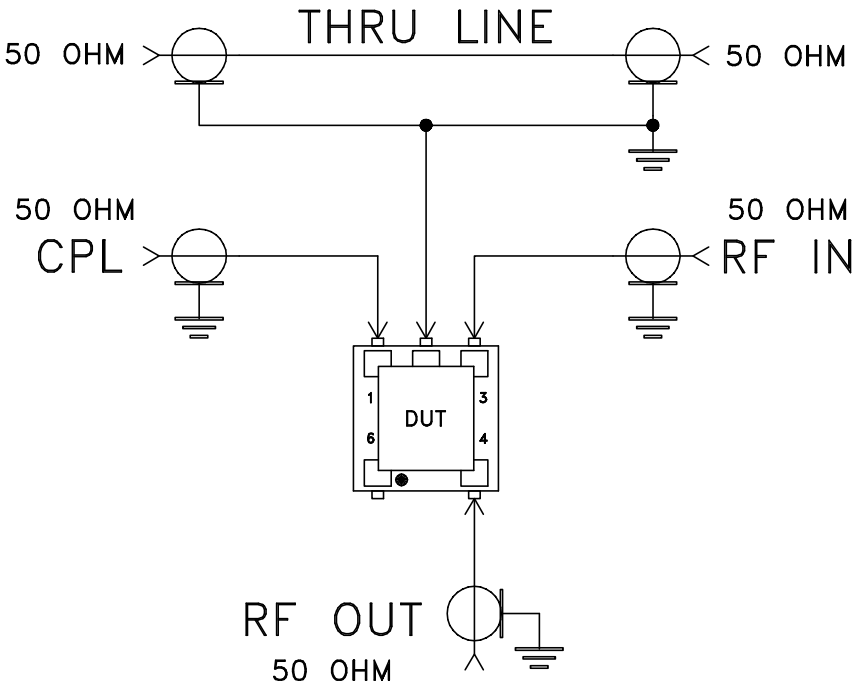

Schematic Diagram

Notes:

1. 50 Ohm SMA Female connectors.
2. PCB Material: Rogers RO4350B or its equivalent, Dielectric Constant=3.5, Thickness=.020"

Mini-Circuits®

THIS DOCUMENT AND ITS CONTENTS ARE THE PROPERTY OF MINI-CIRCUITS.