# Evaluation Board and Circuit

For Pin Connections and DUT Orientation Refer to Data Sheet of the DUT

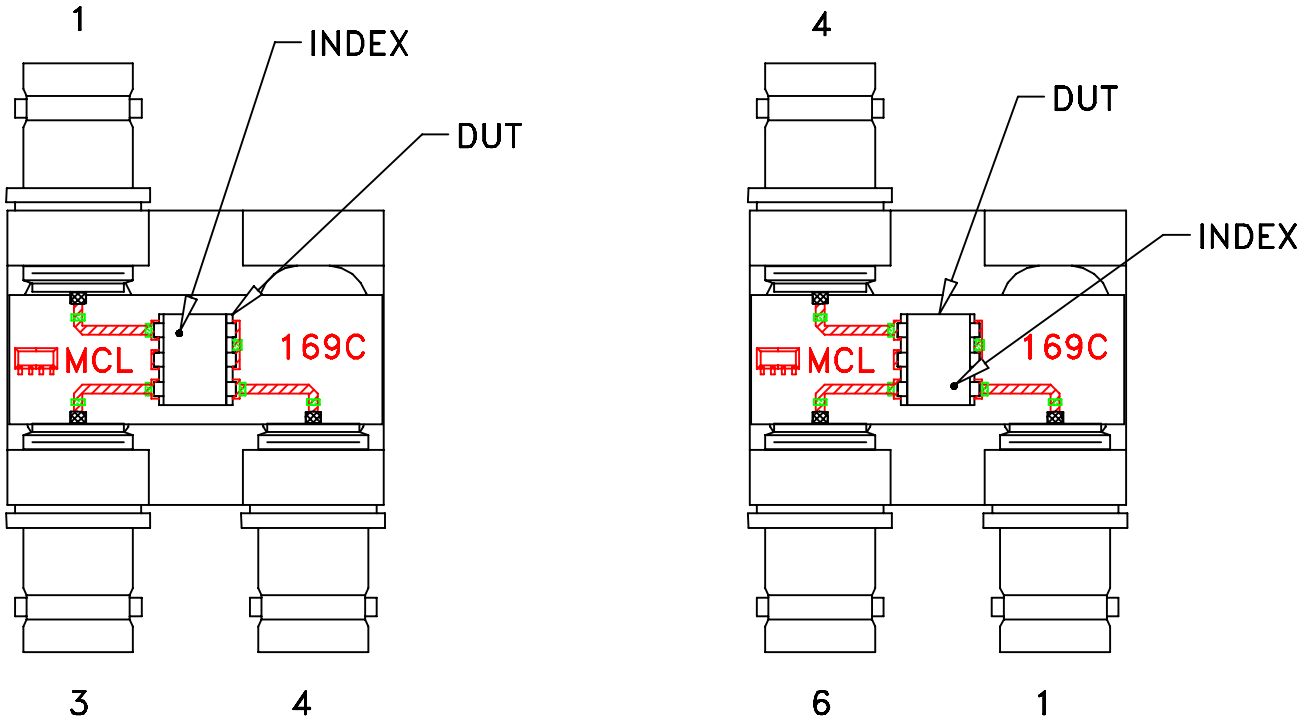


TB-169

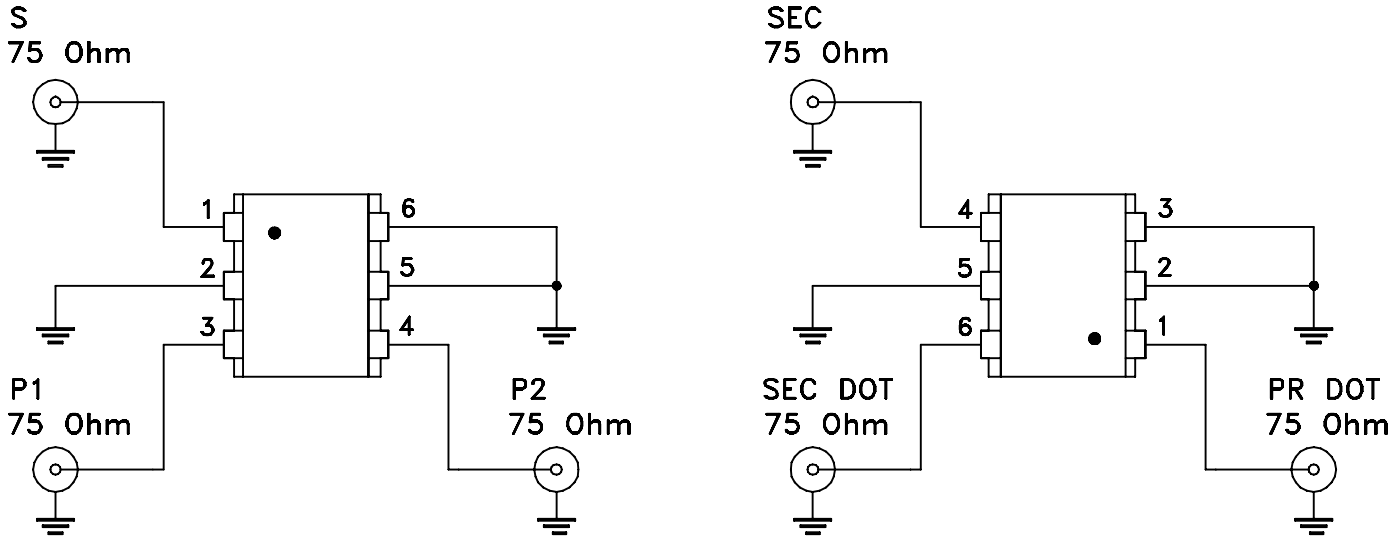


Schematic Diagram

## Notes:

1. BNC Female connectors.
2. PCB Material: Rogers RO4350 or equivalent, Dielectric Constant=3.5, Thickness=.030 inch.

Mini-Circuits®


THIS DOCUMENT AND ITS CONTENTS ARE THE PROPERTY OF MINI-CIRCUITS.