Evaluation Board and Circuit

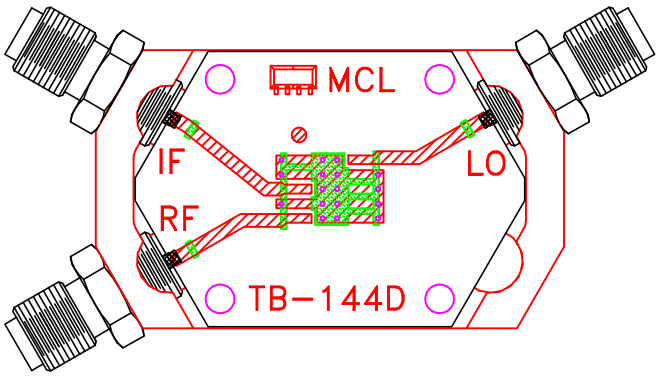

TB-144

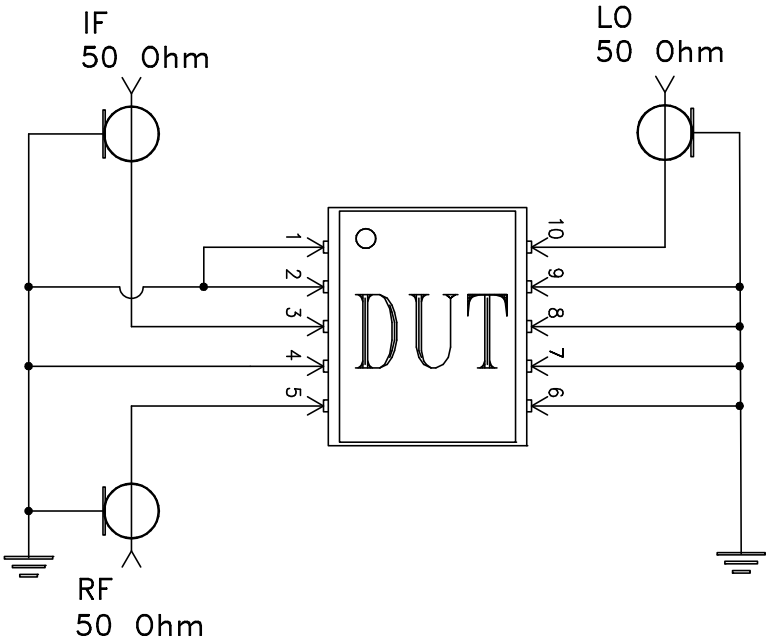

Schematic Diagram

Notes:

1. SMA Female connectors.
2. PCB Material: Rogers RO4350 or equivalent, Dielectric Constant=3.5, Thickness=.020 inch.

Mini-Circuits®

THIS DOCUMENT AND ITS CONTENTS ARE THE PROPERTY OF MINI-CIRCUITS.

THIRD ANGLE PROJECTION

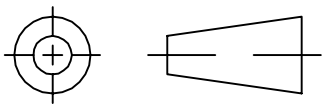

REVISIONS					
REV	ECN No.	DESCRIPTION	DATE	DR	AUTH
A	M81781	UPDATED PCB LAYOUT	06/07/02	GF	DJ
B	M82377	UPDATED DRAWING	07/31/02	AV	WL
C	M102713	ADDED NOTE 2 & "...WITH SMOBC"	01/17/06	MMG	IL
D	M135488	ADDED DZ1650, CHANGED PIN CONN.	02/02/12	GF	DJ

SUGGESTED MOUNTING CONFIGURATION FOR DZ883, DZ885 & DZ1650 CASE STYLES, "10MX01" PIN CONNECTION

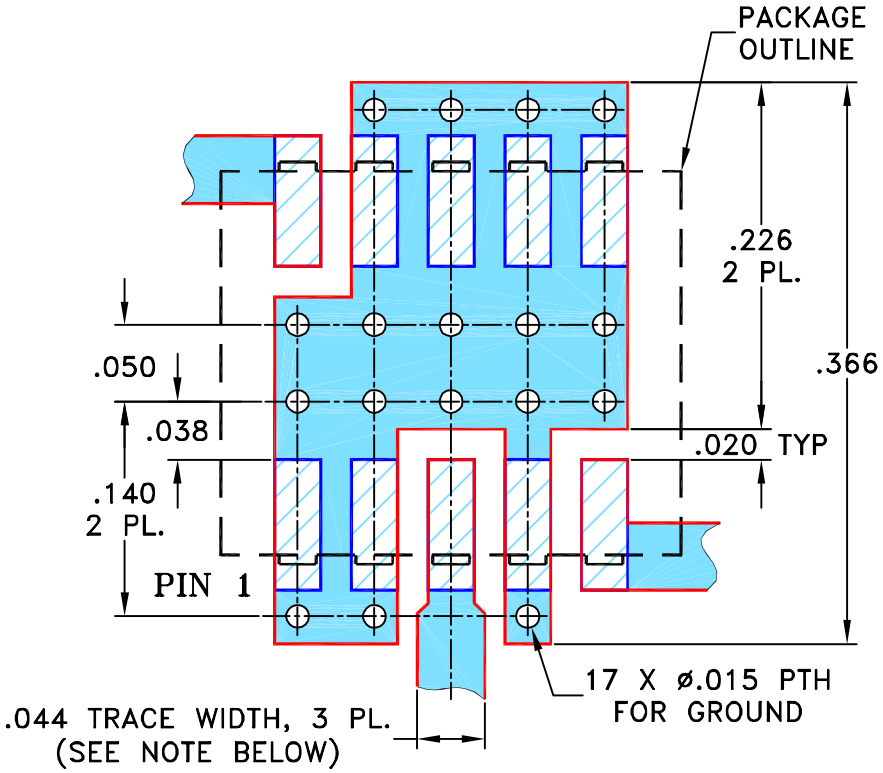

NOTES: 1. TRACE WIDTH IS SHOWN FOR ROGERS RO4350B WITH DIELECTRIC THICKNESS .020" ± .0015"; COPPER: 1/2 OZ. EACH SIDE. FOR OTHER MATERIALS TRACE WIDTH MAY NEED TO BE MODIFIED.

2. BOTTOM SIDE OF THE PCB IS CONTINUOUS GROUND PLANE.

DENOTES PCB COPPER LAYOUT WITH SMOBC (SOLDER MASK OVER BARE COPPER)

DENOTES COPPER LAND PATTERN FREE OF SOLDER MASK

UNLESS OTHERWISE SPECIFIED		INITIALS	DATE
DIMENSIONS ARE IN INCHES	DRAWN	AV	05/08/02
TOLERANCES ON:	CHECKED	DB	05/16/02
2 PL DECIMALS ±	APPROVED	WL	05/16/02
3 PL DECIMALS ± .005			
ANGLES ±			
FRACTIONS ±			

Mini-Circuits®

THIS DOCUMENT AND ITS CONTENTS ARE THE PROPERTY OF MINI-CIRCUITS. EXCEPT FOR USE EXPRESSLY GRANTED, IN WRITING, TO ITS VENDORS, VENDEE AND THE UNITED STATES GOVERNMENT, MINI-CIRCUITS RESERVES ALL PROPRIETARY DESIGN, USE , MANUFACTURING AND REPRODUCTION RIGHTS THERETO. THESE CONTENTS SHALL NOT BE USED, DUPLICATED OR DISCLOSED TO ANY OUTSIDE PARTY, IN WHOLE OR IN PART, WITHOUT WRITTEN PERMISSION OF MINI-CIRCUITS.

ASHEETA1.DWG REV:A DATE:01/12/95

Mini-Circuits® 13 Neptune Avenue Brooklyn NY 11235

PL, 10MX01, DZ883/885/1650, TB-144

SIZE	CODE IDENT	DRAWING NO:	REV:
A	15542	98-PL-045	D

FILE:	SCALE:	SHEET:
98PL045	8:1	1 OF 1