# Evaluation Board and Circuit

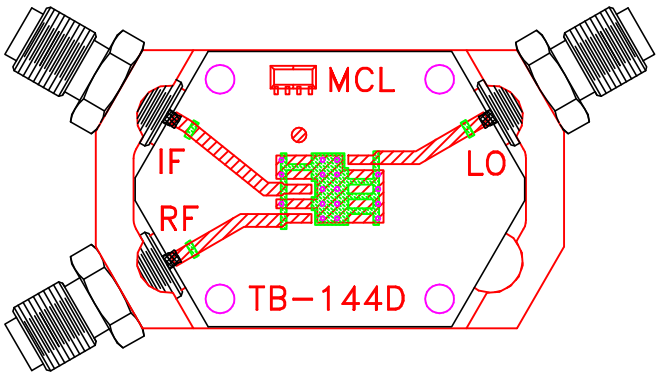


TB-144

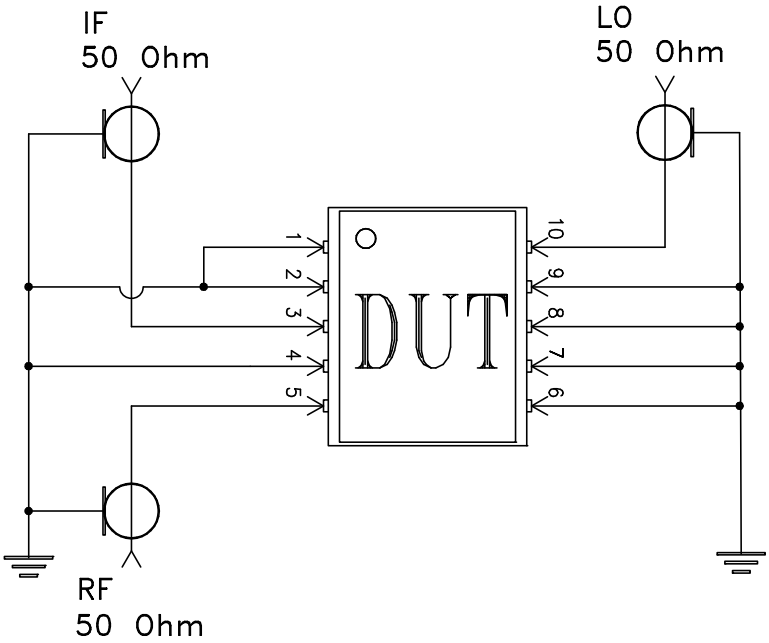


Schematic Diagram

## Notes:

1. SMA Female connectors.
2. PCB Material: Rogers RO4350 or equivalent, Dielectric Constant=3.5, Thickness=.020 inch.

Mini-Circuits®


THIS DOCUMENT AND ITS CONTENTS ARE THE PROPERTY OF MINI-CIRCUITS.

THIRD ANGLE PROJECTION

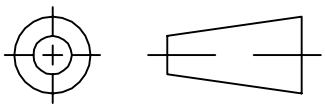

| REVISIONS | | | | | |
|---|---|---|---|---|---|
| REV | ECN No. | DESCRIPTION | DATE | DR | AUTH |
| A | M81781 | UPDATED PCB LAYOUT | 06/07/02 | GF | DJ |
| B | M82377 | UPDATED DRAWING | 07/31/02 | AV | WL |
| C | M102713 | ADDED NOTE 2 & "...WITH SMOBC" | 01/17/06 | MMG | IL |
| D | M135488 | ADDED DZ1650, CHANGED PIN CONN. | 02/02/12 | GF | DJ |

## SUGGESTED MOUNTING CONFIGURATION FOR DZ883, DZ885 & DZ1650 CASE STYLES, "10MX01" PIN CONNECTION

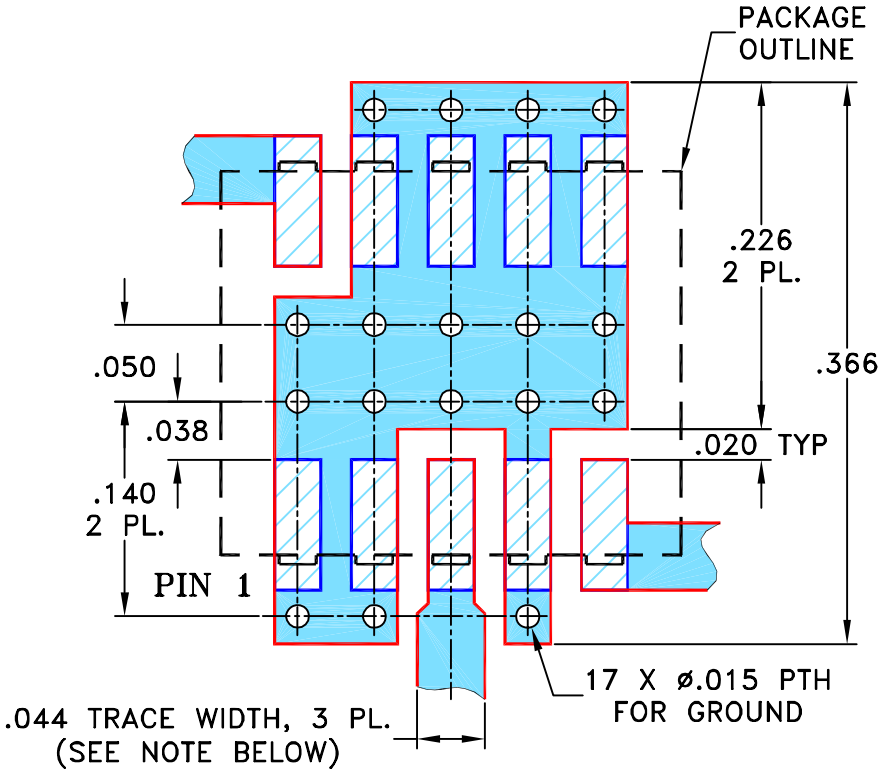


NOTES: 1. TRACE WIDTH IS SHOWN FOR ROGERS RO4350B WITH DIELECTRIC THICKNESS .020" ± .0015"; COPPER: 1/2 OZ. EACH SIDE. FOR OTHER MATERIALS TRACE WIDTH MAY NEED TO BE MODIFIED.

2. BOTTOM SIDE OF THE PCB IS CONTINUOUS GROUND PLANE.

DENOTES PCB COPPER LAYOUT WITH SMOBC (SOLDER MASK OVER BARE COPPER)

DENOTES COPPER LAND PATTERN FREE OF SOLDER MASK

| UNLESS OTHERWISE SPECIFIED | | INITIALS | DATE |
|---|---|---|---|
| DIMENSIONS ARE IN INCHES | DRAWN | AV | 05/08/02 |
| TOLERANCES ON: | CHECKED | DB | 05/16/02 |
| 2 PL DECIMALS ± | APPROVED | WL | 05/16/02 |
| 3 PL DECIMALS ± .005 | | | |
| ANGLES ± | | | |
| FRACTIONS ± | | | |

Mini-Circuits®

THIS DOCUMENT AND ITS CONTENTS ARE THE PROPERTY OF MINI-CIRCUITS. EXCEPT FOR USE EXPRESSLY GRANTED, IN WRITING, TO ITS VENDORS, VENDEE AND THE UNITED STATES GOVERNMENT, MINI-CIRCUITS RESERVES ALL PROPRIETARY DESIGN, USE , MANUFACTURING AND REPRODUCTION RIGHTS THERETO. THESE CONTENTS SHALL NOT BE USED, DUPLICATED OR DISCLOSED TO ANY OUTSIDE PARTY, IN WHOLE OR IN PART, WITHOUT WRITTEN PERMISSION OF MINI-CIRCUITS.

ASHEETA1.DWG REV:A DATE:01/12/95

Mini-Circuits® 13 Neptune Avenue Brooklyn NY 11235

PL, 10MX01, DZ883/885/1650, TB-144

| SIZE | CODE IDENT | DRAWING NO: | REV: |
|---|---|---|---|
| A | 15542 | 98-PL-045 | D |

| FILE: | SCALE: | SHEET: |
|---|---|---|
| 98PL045 | 8:1 | 1 OF 1 |