# Evaluation Board and Circuit

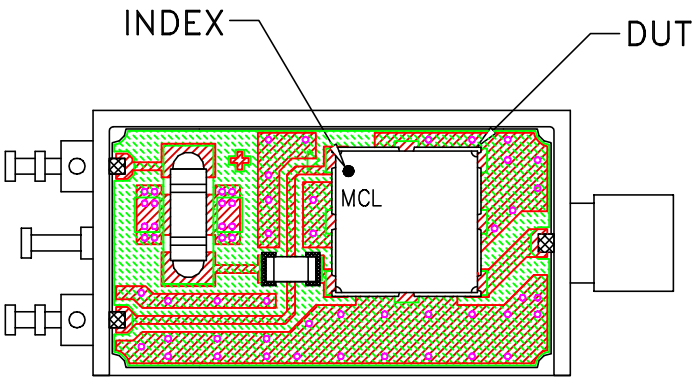


TB-128

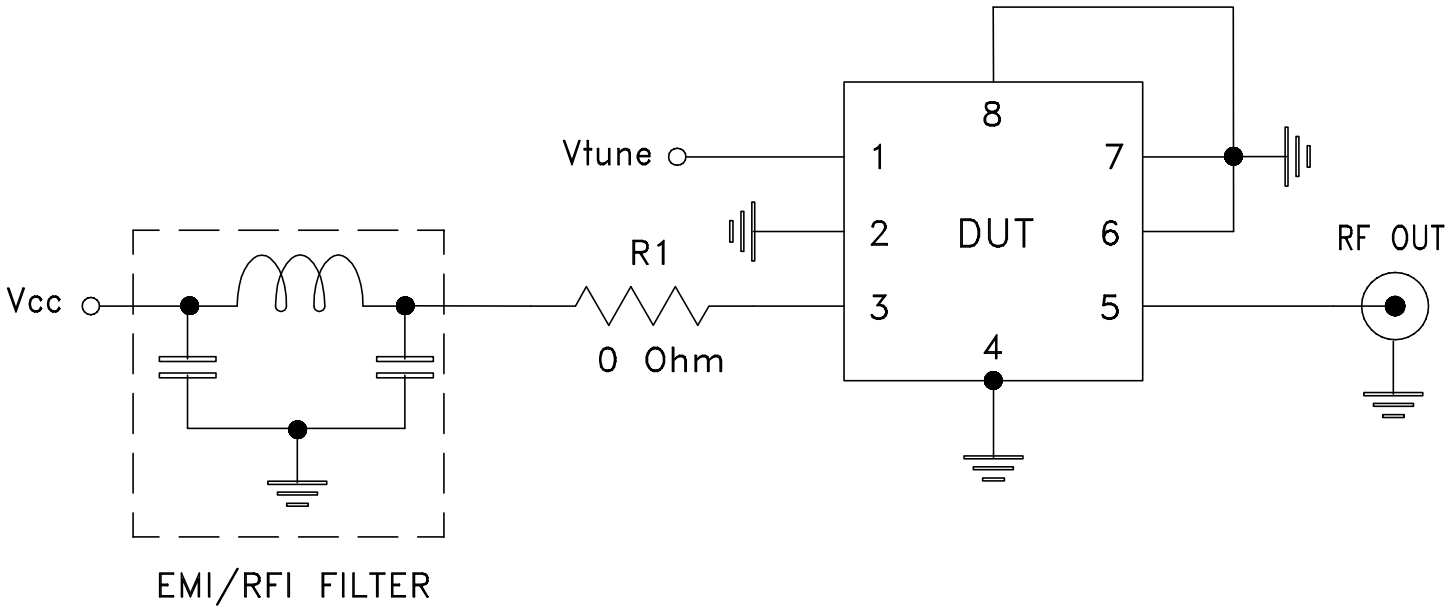


Schematic Diagram

Notes:
1. SMA Female connectors.
2. PCB Material: ROGERS RO4350B or equivalent, Dielectric Constant=4.5, Thickness=.020 inch.

Mini-Circuits®


THIS DOCUMENT AND ITS CONTENTS ARE THE PROPERTY OF MINI-CIRCUITS.