Evaluation Board and Circuit

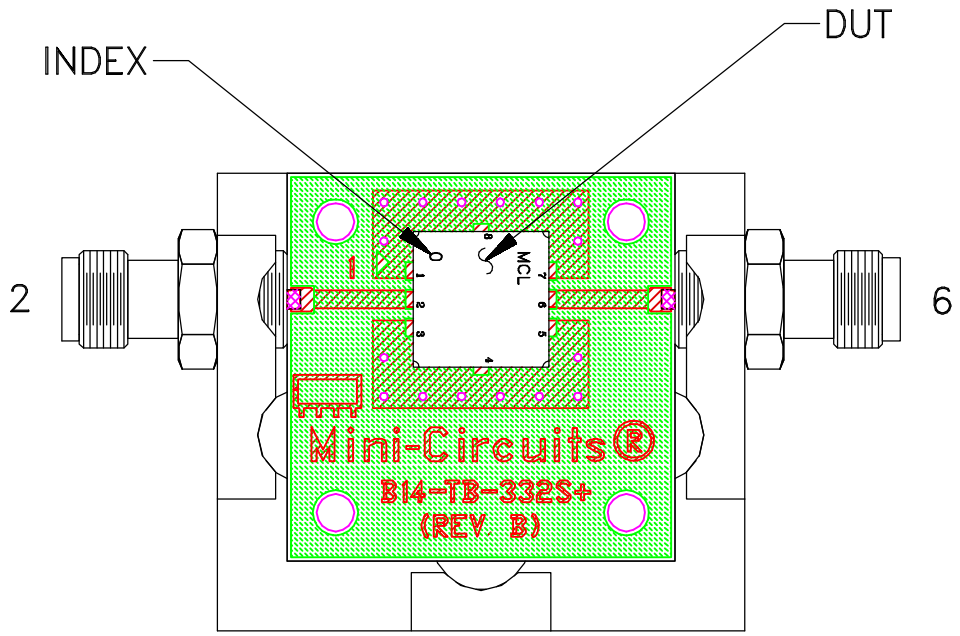

TB-332

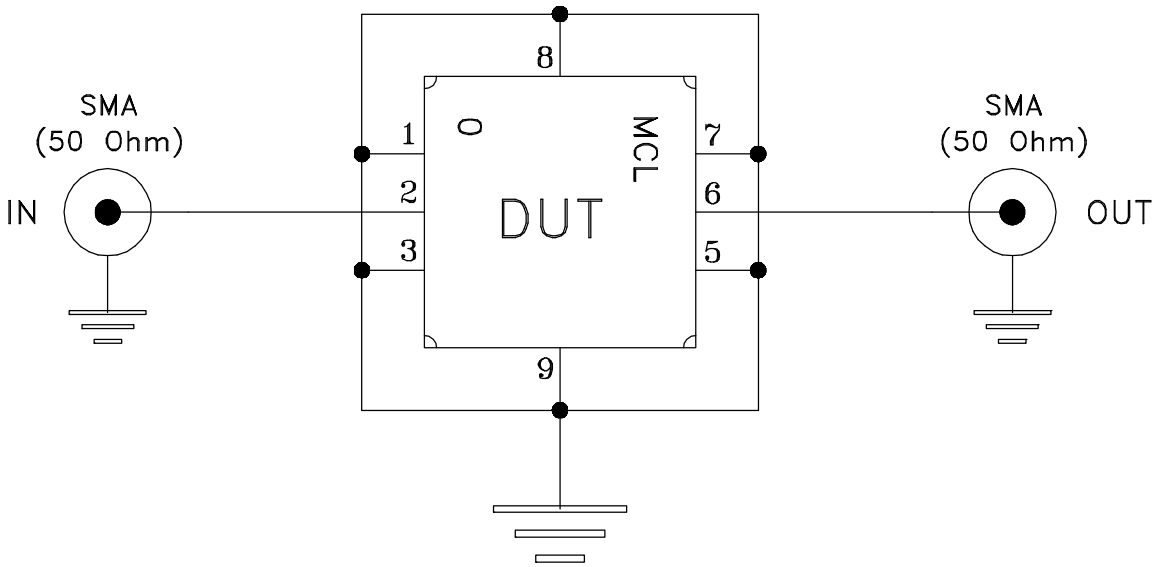

Schematic Diagram

Notes:

1. 50 Ohm SMA Female connectors.
2. PCB Material: RO4350 or equivalent,
   Dielectric Constant=3.5, Thickness=.020 inch.

Mini-Circuits®

THIS DOCUMENT AND ITS CONTENTS ARE THE PROPERTY OF MINI-CIRCUITS.