THIRD ANGLE PROJECTION

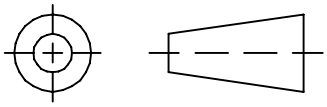

REVISIONS					
REV	ECN No.	DESCRIPTION	DATE	DR	AUTH
E	**M119737**	**UPDATED PCB**	**10.08**	**MF**	**AD**
F	M127659	UPDATED CARR	06.10	SW	SG
G	M127846	UPDATED SCHEMATIC DIAGRAM	06.10	SW	SG
H	M131840	UPDATED DWG	05.11	MF	AD

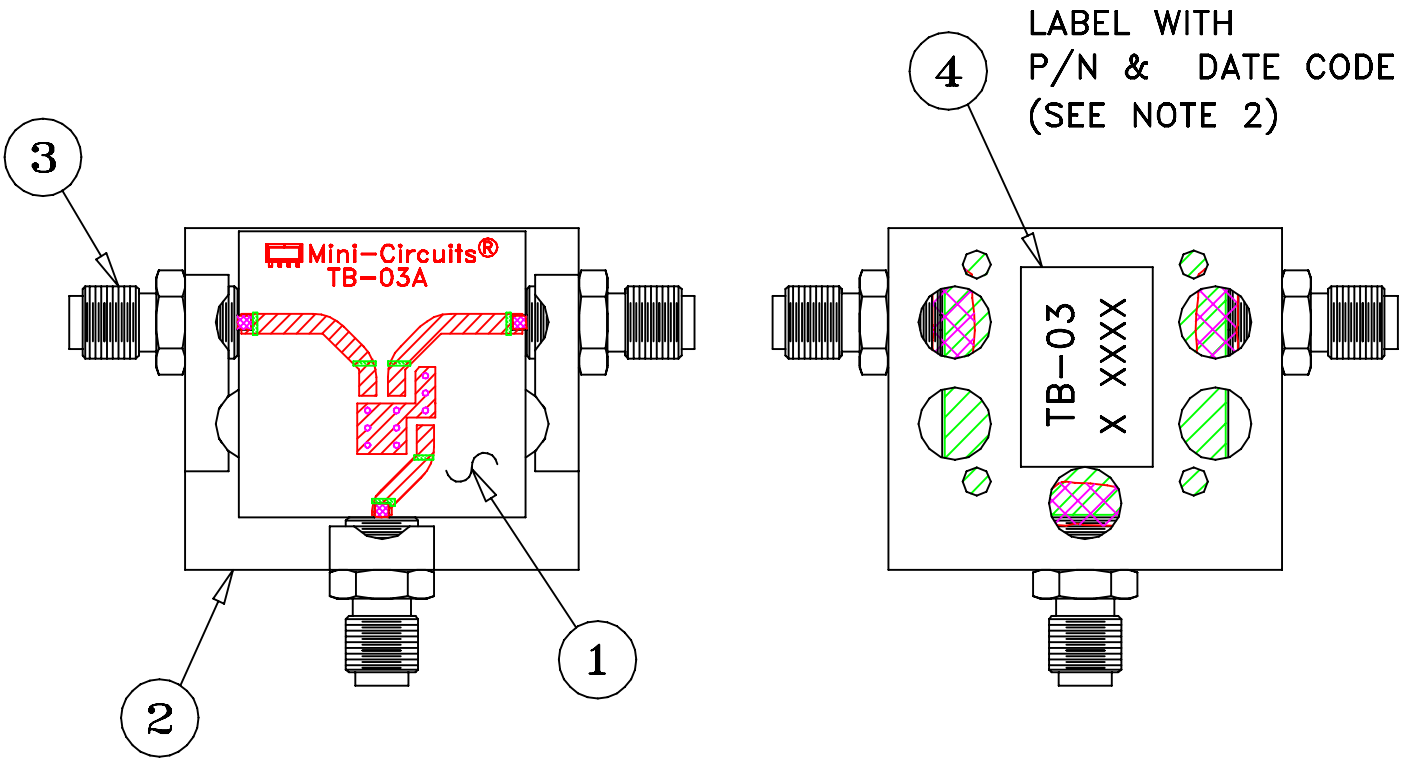

NOTES:

1. REFER TO -09 PAGE FOR ITEM DESCRIPTIONS. DESIGNATION NUMBERS ON -20 PAGE CORRESPOND TO THE NUMBERS ON -09 PAGE.
2. FOR TEXT HEIGHT & STYLE ON THE LABEL REFER TO: D3-G209.

UNLESS OTHERWISE SPECIFIED		INITIALS	DATE
DIMENSIONS ARE IN INCHES	DRAWN	S.WOLYNSKI	06.29.99
TOLERANCES ON:	CHECKED	SG	07.06.99
2 PL DECIMALS ±	APPROVED	MG	07.10.99
3 PL DECIMALS ±			
ANGLES ±			
FRACTIONS ±			

Mini-Circuits®
THIS DOCUMENT AND ITS CONTENTS ARE THE PROPERTY OF MINI-CIRCUITS. EXCEPT FOR USE EXPRESSLY GRANTED, IN WRITING, TO ITS VENDORS, VENDEE AND THE UNITED STATES GOVERNMENT, MINI-CIRCUITS RESERVES ALL PROPRIETARY DESIGN, USE , MANUFACTURING AND REPRODUCTION RIGHTS THERETO. THESE CONTENTS SHALL NOT BE USED, DUPLICATED OR DISCLOSED TO ANY OUTSIDE PARTY, IN WHOLE OR IN PART, WITHOUT WRITTEN PERMISSION OF MINI-CIRCUITS.

ASHEETA1.DWG REV:A DATE:01/12/95

Mini-Circuits® 13 Neptune Avenue Brooklyn NY 11235

TB,ADE,CD542/636,06MX01,50

SIZE	CODE IDENT	DRAWING NO:	REV:
A	15542	TB-03-20	H

FILE:	SCALE:	SHEET:
WTB-03	1.5:1	1 OF 2

Evaluation Board and Circuit

For Pin Connections and DUT Orientation Refer to Data Sheet of the DUT

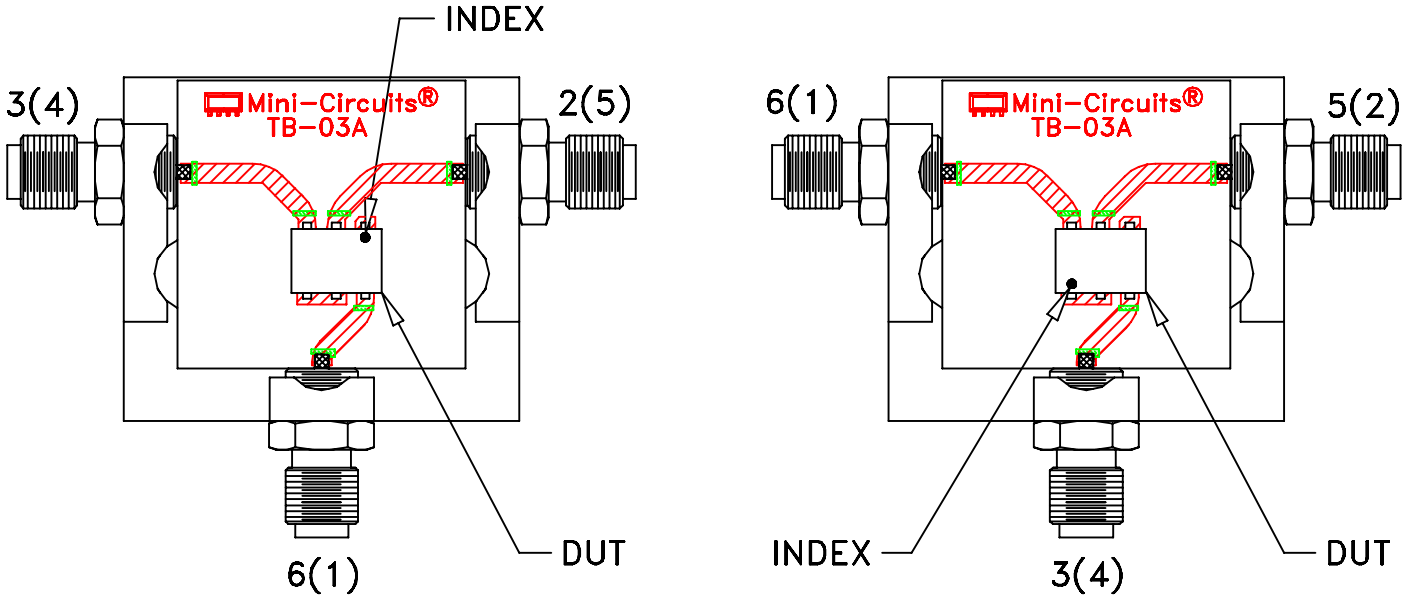

TB-03

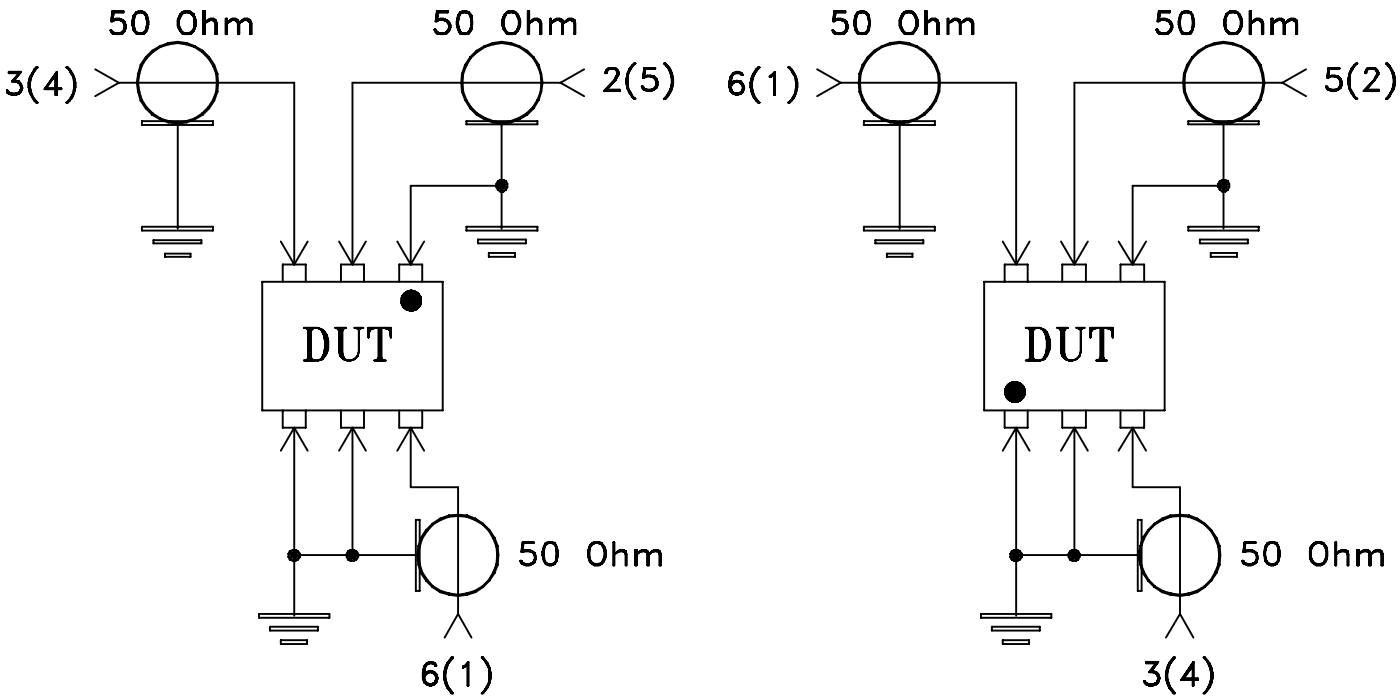

Schematic Diagram

Notes:

1. 50 Ohm SMA Female connectors.
2. PCB Material: Rogers RO4350 or equivalent, Dielectric Constant=3.5, Thickness=.030 inch.

Mini-Circuits®

THIS DOCUMENT AND ITS CONTENTS ARE THE PROPERTY OF MINI-CIRCUITS.