Evaluation Board and Circuit

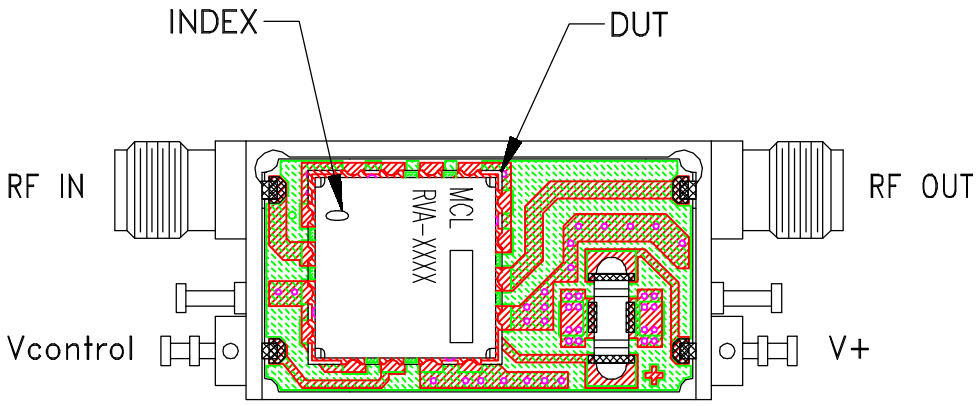

TB–163

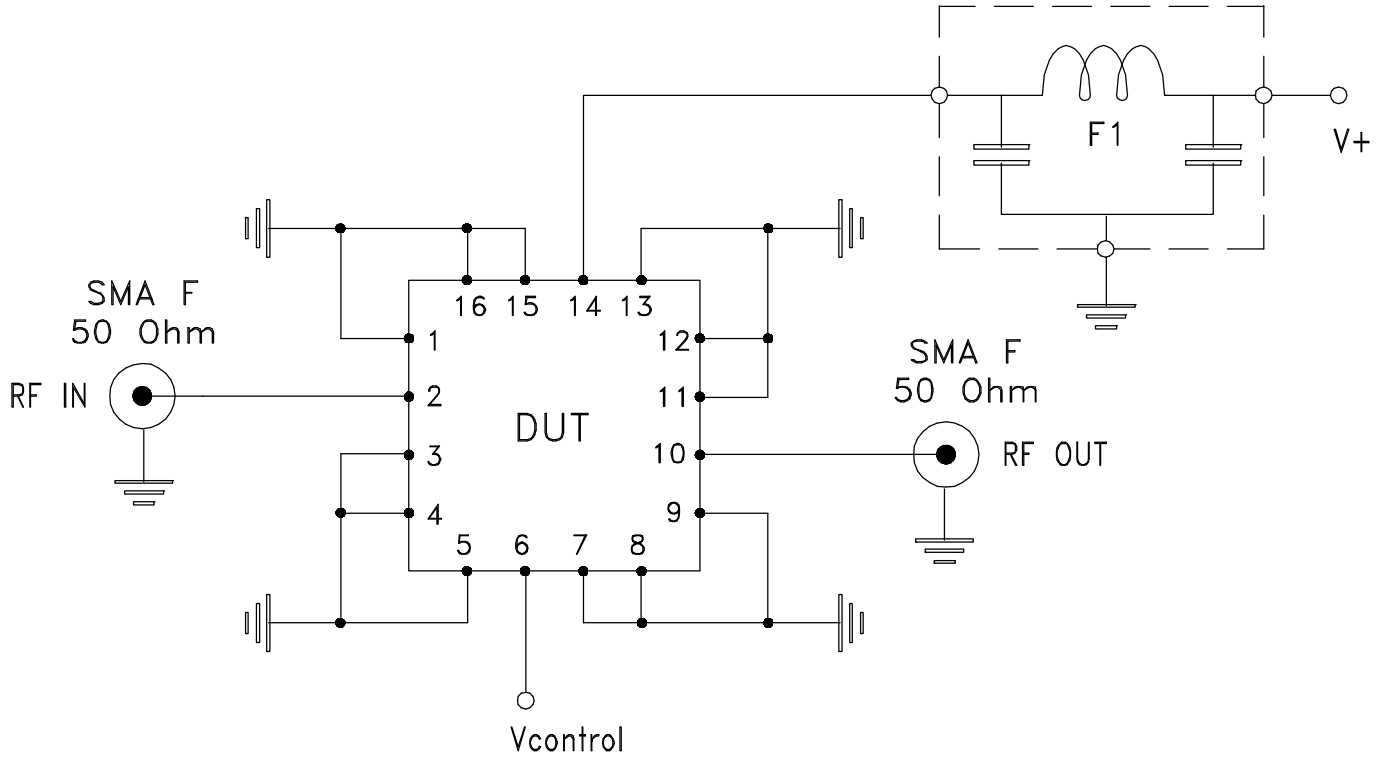

Schematic Diagram

Notes:
1. SMA Female connectors.
2. PCB Material: ROGERS RO4350B or equivalent, Dielectric Constant=4.5, Thickness=.020 inch.

Mini–Circuits®

THIS DOCUMENT AND ITS CONTENTS ARE THE PROPERTY OF MINI–CIRCUITS.