Evaluation Board and Circuit

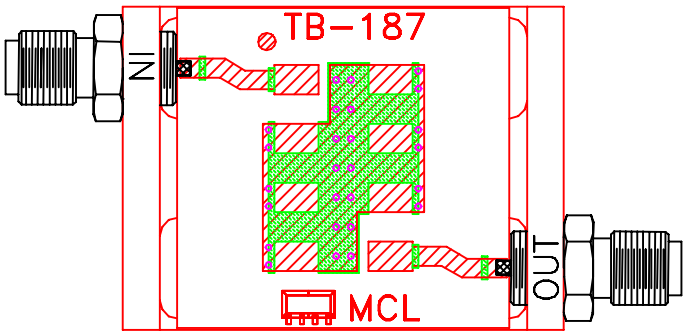

TB-187

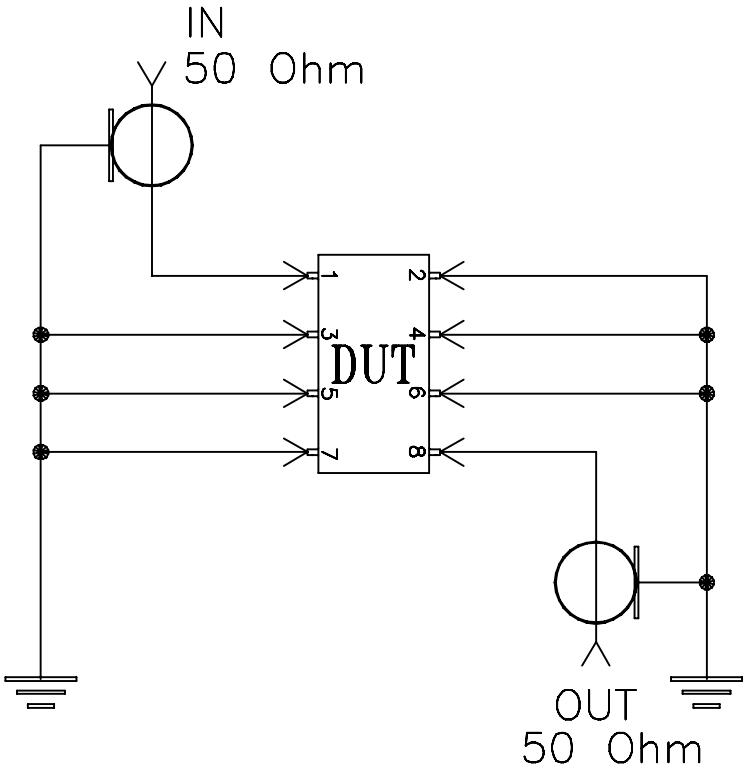

Schematic Diagram

Notes:

1. SMA Female connectors.
2. PCB Material: Rogers RO4350 or equivalent, Dielectric Constant=3.5, Thickness=.030 inch.

Mini-Circuits®

THIS DOCUMENT AND ITS CONTENTS ARE THE PROPERTY OF MINI-CIRCUITS.