Evaluation Board and Circuit

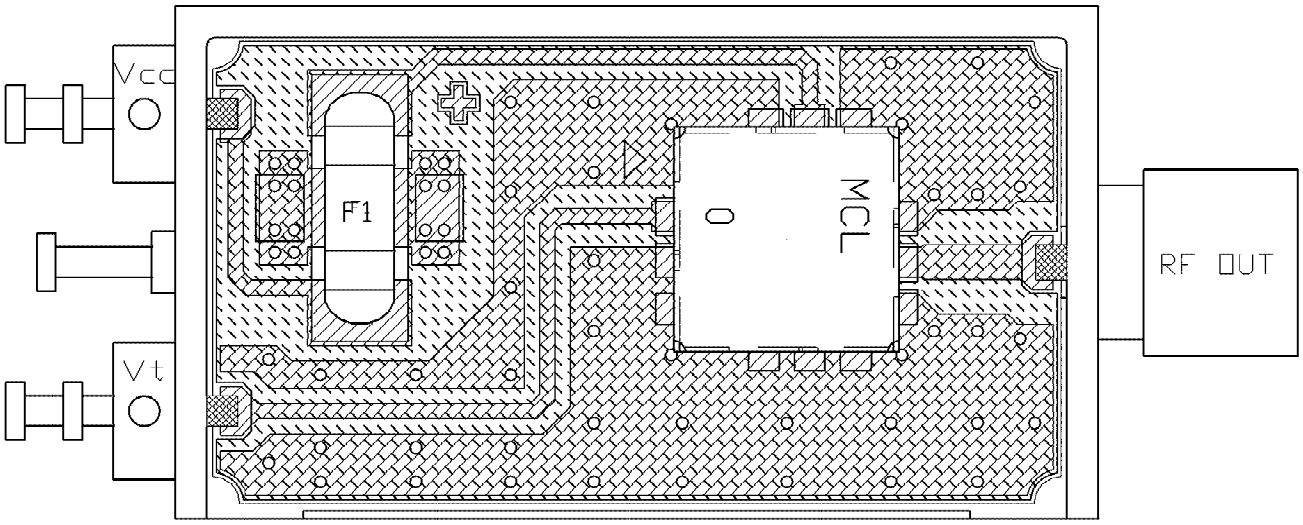

TB-271

NOTES:

1. SMA FEMALE CONNECTORS.
2. PCB MATERIAL: RO4350B OR EQUIVALENT, DIALECTRIC CONSTANT=3.48, DIALECTRIC THICKNESS=.020 INCH.

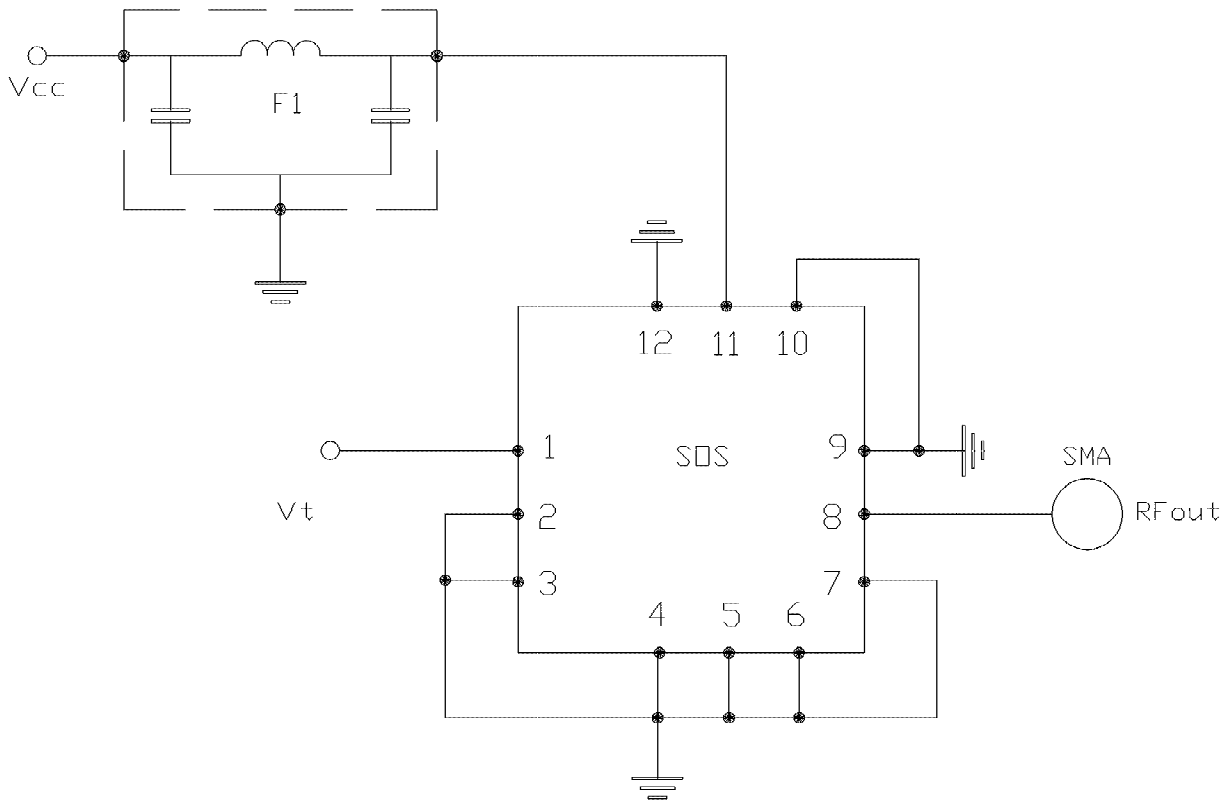

Schematic Diagram

THIS DOCUMENT AND ITS CONTENTS ARE THE PROPERTY OF MINI-CIRCUITS.