# Evaluation Board and Circuit

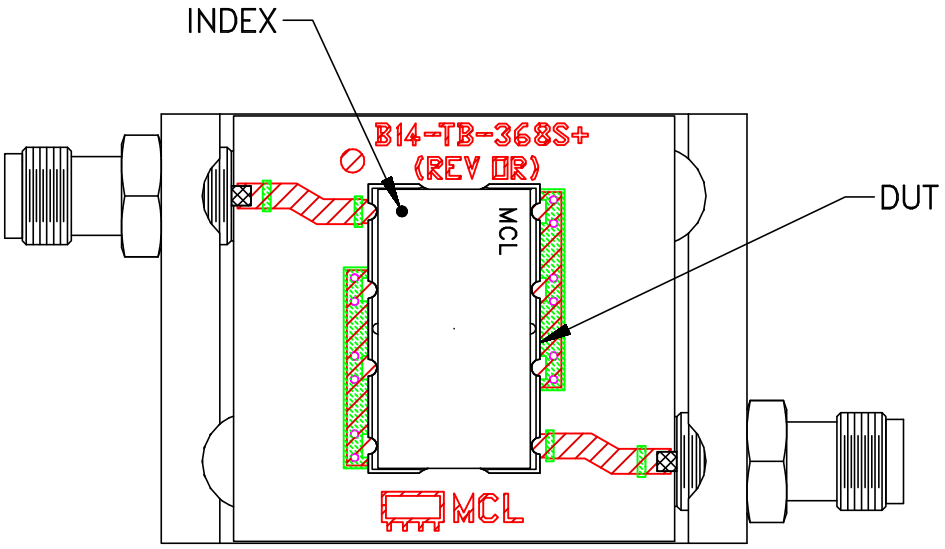


TB-368

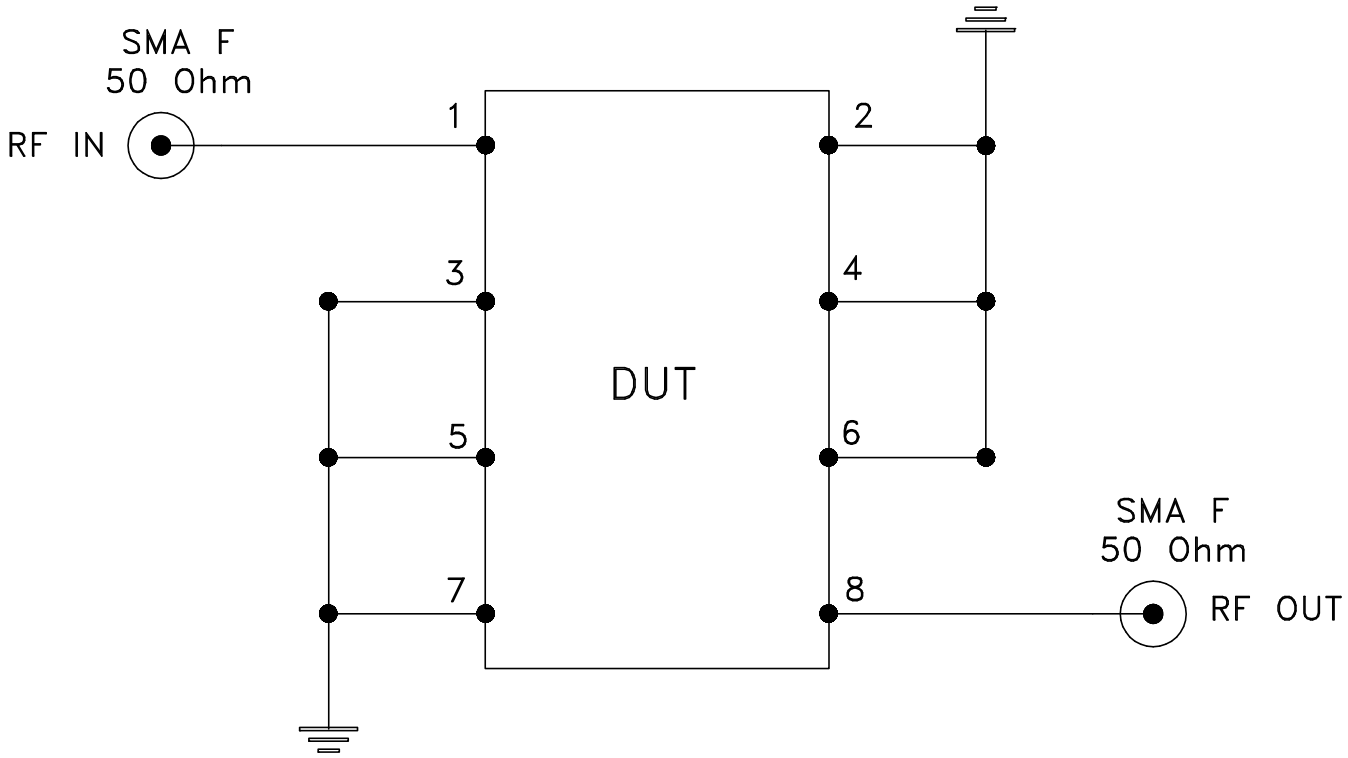


Schematic Diagram

Notes:
1. SMA Female connectors.
2. PCB Material: ROGERS R04350B or equivalent, Dielectric Constant=3.5, Thickness=.030 inch.

Mini-Circuits®