# Evaluation Board and Circuit

For Pin Connections refer to Data Sheet of the DUT

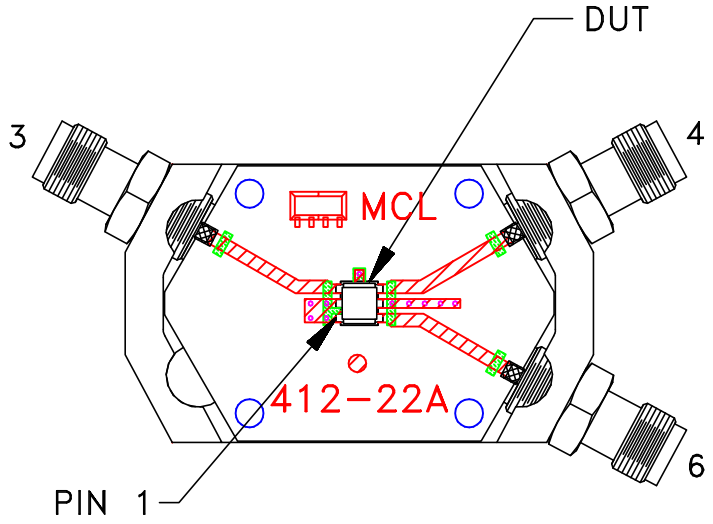


TB-654+

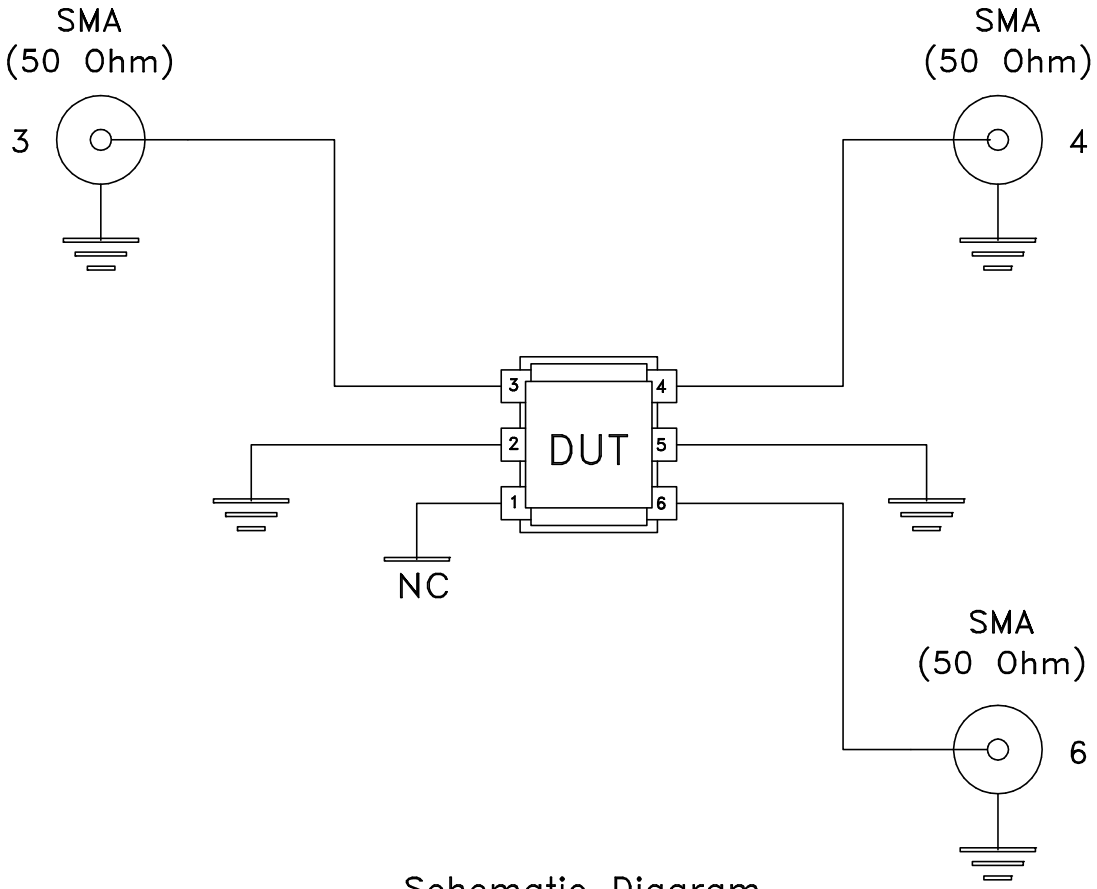


Schematic Diagram

Notes:

1. 50 Ohm SMA Female connectors.
2. PCB Material: RO4350 or equivalent,
   Dielectric Constant=3.5, Thickness=.020 inch.

Mini-Circuits®