Evaluation Board and Circuit

TB-TPCN-203+

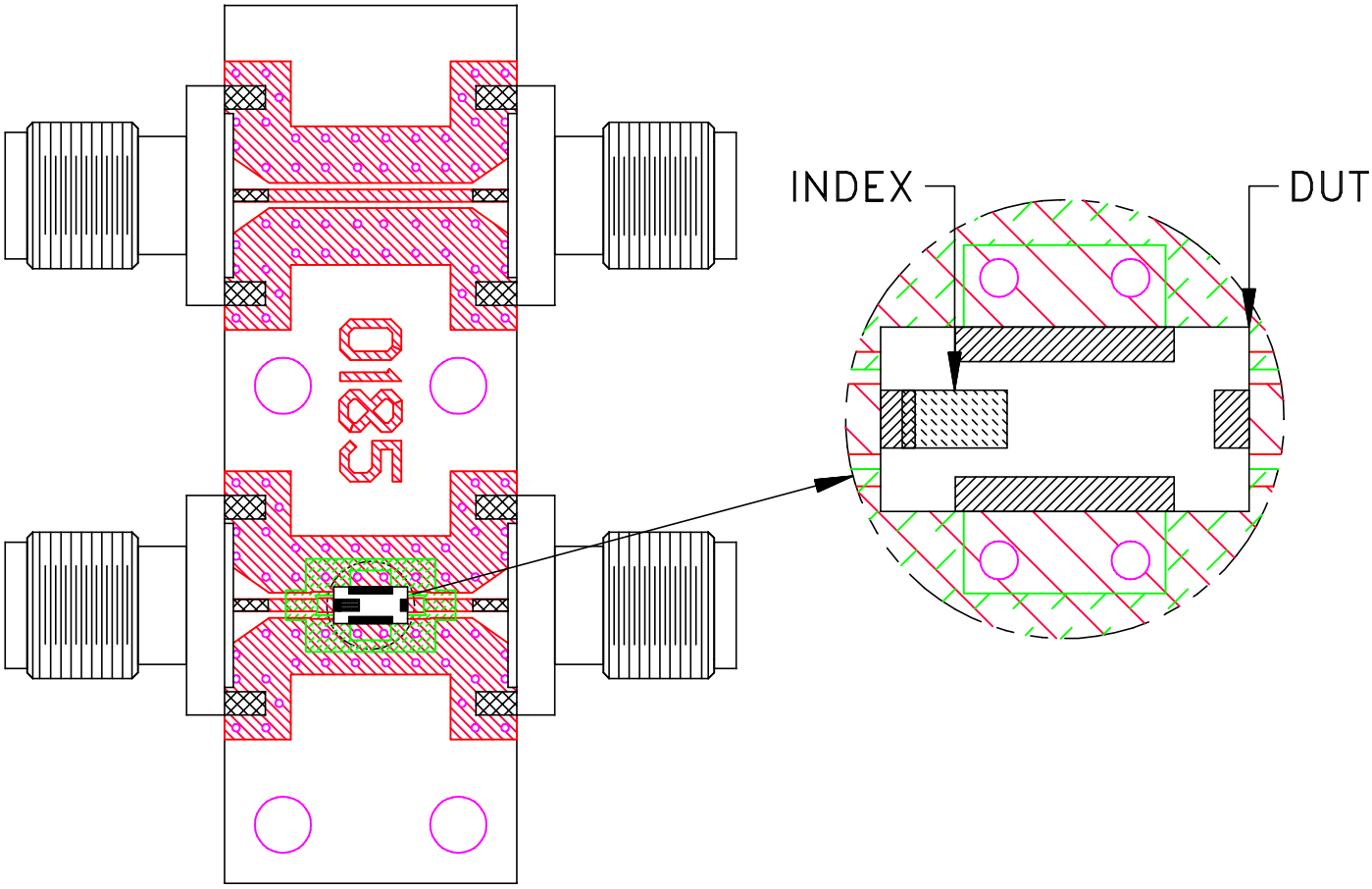

Schematic diagram

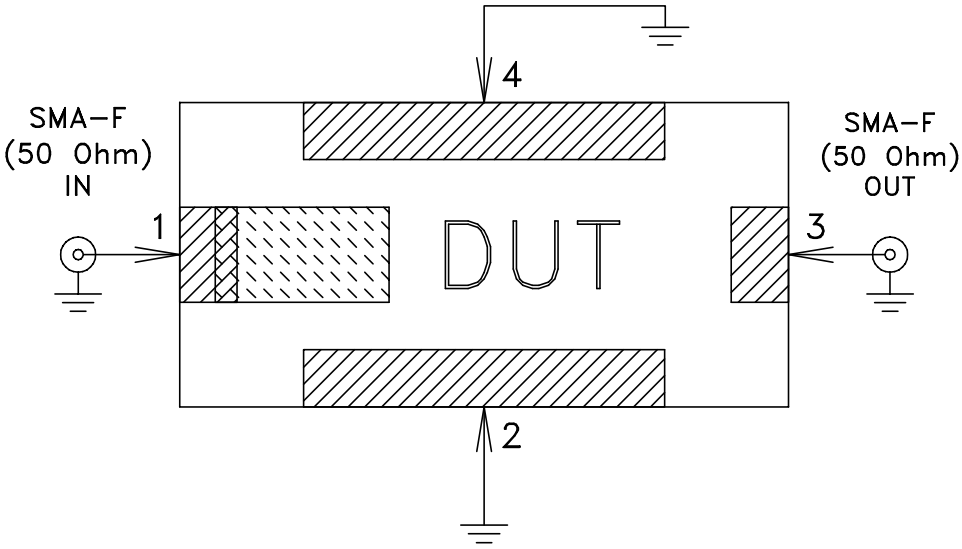

Notes:

1. PCB Material: ROGERS (RO4350) OR Equivalent, Dielectric Constant=3.5
Dielectric Thickness: .010 inch
2. 50 Ohm SMA Female Connectors.

Mini-Circuits®

THIS DOCUMENT AND ITS CONTENTS ARE THE PROPERTY OF MINI-CIRCUITS.