Evaluation Board and Circuit

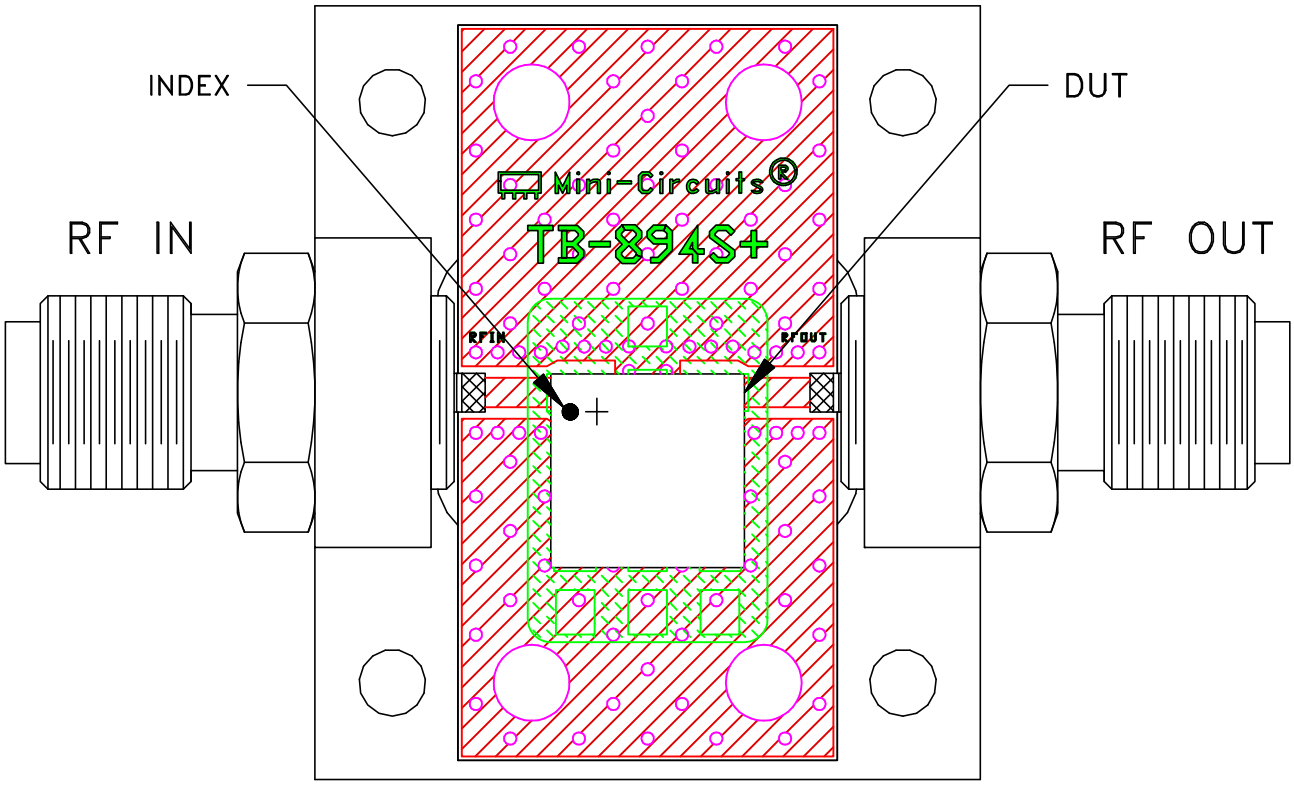

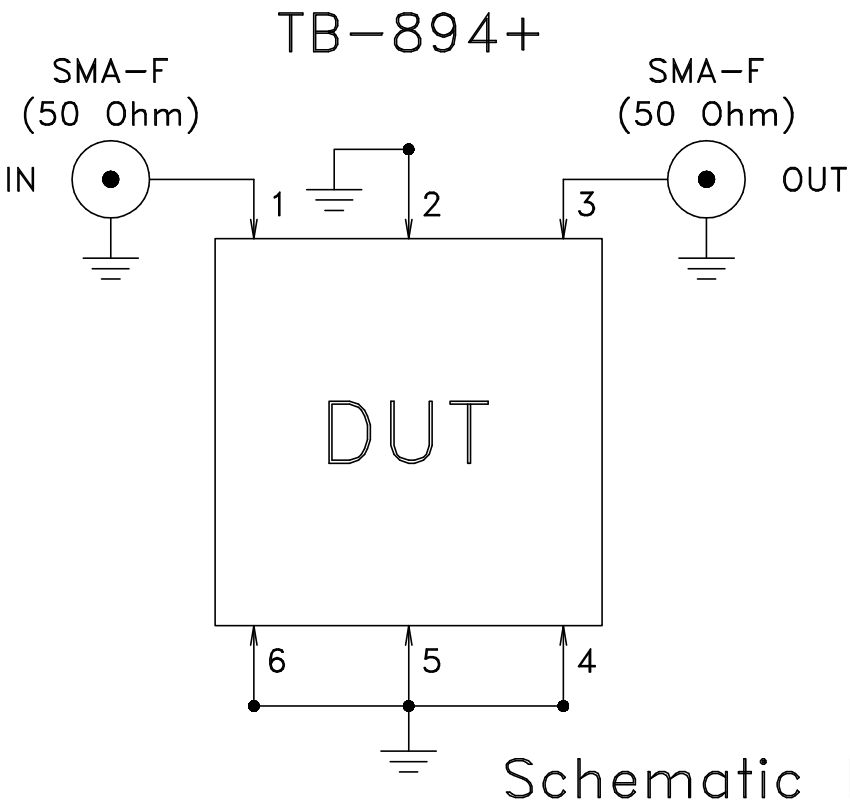

Schematic Diagram

NOTES:

1. 50 Ohm SMA Female connectors.
2. PCB Material: ROGERS (RO4350B) OR Equivalent
   Dielectric Constant=3.48±.05, Thickness=.020 inch.

Mini-Circuits®

THIS DOCUMENT AND ITS CONTENTS ARE THE PROPERTY OF MINI-CIRCUITS.