# Evaluation Board and Circuit

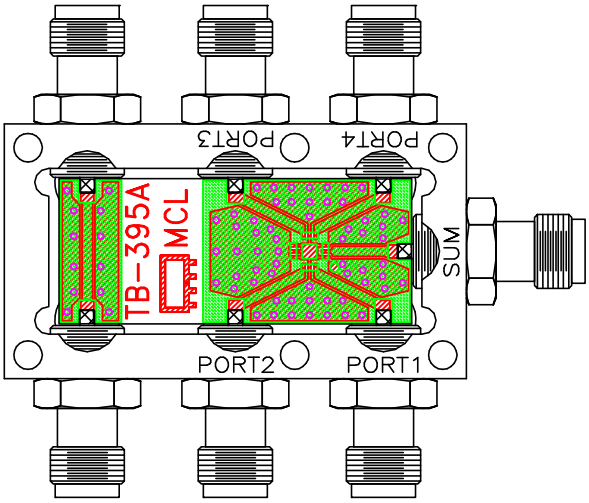


TB-395+

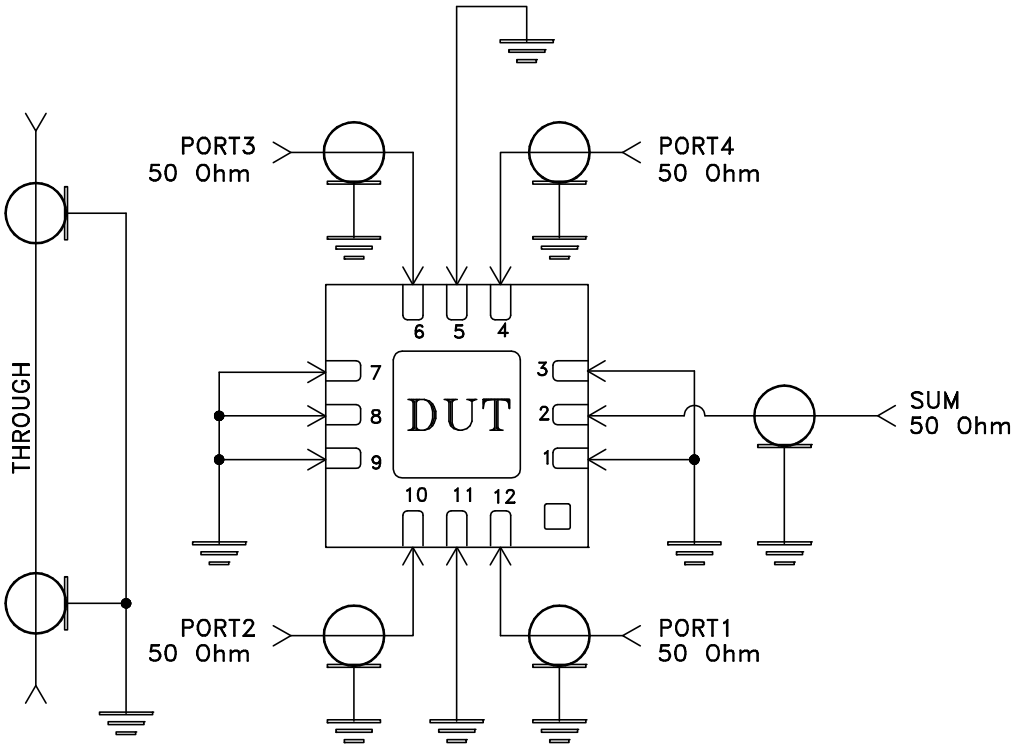


Schematic Diagram

## Notes:

1. SMA Female connectors.
2. PCB Material: Rogers RO4350 or equivalent, Dielectric Constant=3.5, Thickness=.020 inch.

Mini-Circuits®


THIS DOCUMENT AND ITS CONTENTS ARE THE PROPERTY OF MINI-CIRCUITS.