WIDEBAND, MICROWAVE, SHUTDOWN

Monolithic Amplifier

TSS-183A+

50Ω 5 to 18 GHz

THE BIG DEAL

- Fast shutdown, 29 nS
- Gain, 13.6 dB typ. & Flatness, ±0.9 dB
- Output Power, up to +17.9 dBm typ.
- Excellent isolation, 36 dB typ.
- Positive Supply Voltage, 5.0V
- Integrated DC blocks, Bias-Tee & Microwave bypass capacitor
- Unconditionally Stable

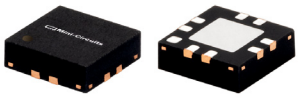

Generic photo used for illustration purposes only

CASE STYLE: DQ849

+RoHS Compliant
The +Suffix identifies RoHS Compliance. See our web site for RoHS Compliance methodologies and qualifications

APPLICATIONS

- Military EW and Radar
- DBS
- Wideband Isolation amplifier
- Microwave point-to-point radios
- Satellite systems

PRODUCT OVERVIEW

The TSS-183A+ is a surface mount, MMIC amplifier with shutdown feature fabricated using InGaAs PHEMT technology and is a fully integrated gain block up to 18 GHz. It is packaged in Mini-Circuits industry standard 3x3 mm MCLP package, which provides excellent RF and thermal performance. The TSS-183A+ integrates the entire matching network with the majority of the bias circuit inside the package, reducing the need for complicated external circuits. This approach makes the TSS-183A+ extremely flexible and enables simple, straightforward use.

KEY FEATURES

Feature	Advantages
Wideband, 5 to 18 GHz	Broad frequency range supports a wide array of applications from microwave radio and radar , to military communications and countermeasures.
Excellent Gain Flatness	Typical ±0.9 dB gain flatness across the entire frequency range minimizes the need for external equalizer networks making it a great fit for instrumentation and EW applications.
High Isolation	With reverse isolation of 36 dB, the TSS-183A+ is an excellent choice for buffering broadband circuits. It is an ideal LO driver amplifier and provides designers system flexibility and margin when integrating cascaded RF components.
Shutdown feature	Allow users to turn on and off the amplifier with pulsed signals while keeping the power supply at constant voltage.
Small size	3x3 mm, 8-lead MCLP package
Integrated DC Blocks & Bias-Tee	Saver motherboard space and minimizes overall cost. Very user friendly.

REV. A
ECO-011809
TSS-183A+
GY/CP
220209

ELECTRICAL SPECIFICATIONS[1] AT 25°C, ZO=50Ω, AND V_{DD}=5V UNLESS OTHERWISE NOTED.

Parameter	Condition (GHz)	Amplifier-ON Min.	Amplifier-ON Typ.	Amplifier-ON Max.	Amplifier-OFF Typ.	Units
Frequency Range		5		18	5-18	GHz
Noise Figure	5		7.4		—	dB
	8		4.1		—	
	10		4.4		—	
	12		4.6		—	
	14		5.0		—	
	18		6.0		—	
Gain	5	—	13.5	—	-27	dB
	8	12	14.9	—	-19	
	10	12	14.2	—	-18	
	12	—	13.6	—	-17	
	14	—	13.4	—	-17	
	18	10.4	13.1	—	-18	
Gain Flatness	5-18		±0.9		—	dB
Reversed Isolation	5-18		36		22	dB
Input Return Loss	5		12		6	dB
	8		36		3	
	10		16		3	
	12		13		4	
	14		16		5	
	18		8		5	
Output Return Loss	5		9		6	dB
	8		14		4	
	10		18		4	
	12		14		2	
	14		13		2	
	18		9		1	
Output Power @1dB compression AMP-ON	5	—	17.2	—	—	dBm
	8	—	18.5	—	—	
	10	16.0	17.9	—	—	
	12	—	17.8	—	—	
	14	—	18.7	—	—	
	18	—	17.9	—	—	
Output IP3 (Pout=+9dBm/tone)	5		33.7		—	dBm
	8		30.0		—	
	10		28.9		—	
	12		27.8		—	
	14		26.6		—	
	18		27.4		—	
Device Operating Voltage (V_{DD})		4.8	5.0	5.2	5.0	V
Device Operating Current (Id)			145	166	0.3	mA
Control Voltage (V_G)			0		-5	V
DC Current (Id) Variation Vs. Temperature[2]			29.4		—	µA/°C
DC Current (Id) Variation Vs. Voltage			0.0021		—	mA/mV
Thermal Resistance			61			°C/W

1 Measured on Mini-Circuits Characterization test board TB-969+. See Characterization Test Circuit (Fig. 1)
2 (Current at 85°C - Current at -45°C)/130)

MAXIMUM RATINGS[3]

Parameter	Ratings
Operating Temperature (ground lead)	-40°C to 85°C
Storage Temperature	-55°C to 100°C
Total Power Dissipation	0.98 W
Input Power	20 dBm
DC Voltage V_{DD}[4] (Pad 7, 8)	5.5V
DC Voltage V_G[5] (Pad 3, 4)	-15V
DC Voltage RF-IN & RF-OUT (Pad 2 & 5)	10V

3. Permanent damage may occur if these limits are exceeded.
4. Measured by keeping V_G=0V. V_{DD1}& V_{DD2} pads are connected per Figure 1.
5. Measured by keeping V_{dd}=5$_{V.VG1}$& V_{G2} pads are connected per Figure 1.

CONTROL VOLTAGE (V_G) FIG. 1

	Min.	Typ.	Max.	Units
Amplifier-ON	-0.2	—	0	V
Amplifier-OFF	-5	—	-4	V

SWITCHING SPECIFICATIONS (RISE/FALL TIME)

Parameter		Min.	Typ.	Max.	Units
Amplifier ON to Shutdown	OFF TIME (50% Control to 10% RF)	—	29	—	ns
	FALL TIME (90 to 10% RF)	—	14	—	
Amplifier Shutdown to ON	ON TIME (50% Control to 90% RF)	—	226	—	ns
	RISE TIME (10% to 90% RF)	—	163	—	
Control Voltage Leakage		—	12	—	mV

SIMPLIFIED SCHEMATIC AND PAD DESCRIPTION

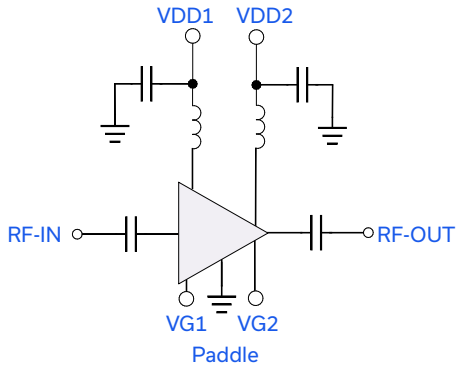

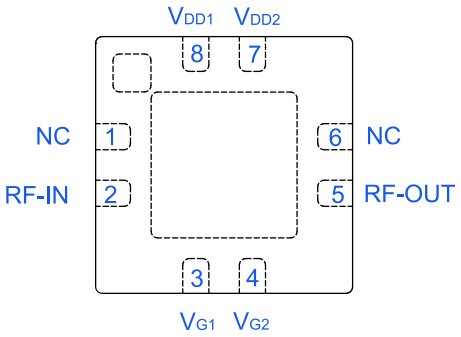

Function	Pad Number	Description (See Application Circuit, Fig. 1)
RF-IN	2	RF input pad
RF-OUT	5	RF output pad
V_{DD1} & V_{DD2}	7,8	DC power supply (VDD). Two pads are connected per Figure 1.
GND	Paddle	Connected to ground.
V_{G1} & V_{G2}	3,4	Control voltage for shutdown(VG). Two pads are connected per Figure 1.
NC	1,6	No internal connection. Recommended usage per PCB layer PL-588

CHARACTERIZATION TEST CIRCUIT / RECOMMENDED APPLICATION CIRCUIT

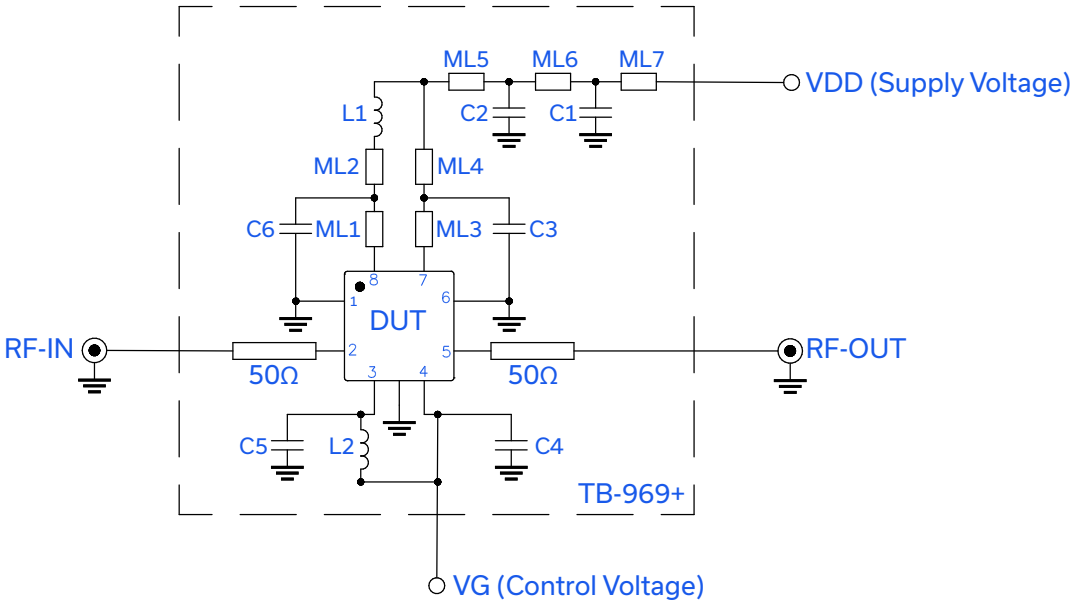

Fig 1. Block diagram of Test Circuit used for characterization. (DUT soldered on Mini-Circuits Characterization test board TB-969+) Gain, Return loss, Output power at 1dB compression (P1dB) , output IP3 (OIP3) and noise figure measured using Agilent's N5242A PNA-X microwave network analyzer.

Conditions:
1. Gain and Return loss: Pin= -25dBm
2. Output IP3 (OIP3): Two tones, spaced 1 MHz apart, +9dBm/tone at output.
3. Switching Time: Pin=7dBm at 5.2 GHz. VG=Pulse signal at 1 KHz, -5V, with offset=-2.5V, 50% duty cycle. Vdd=5V.

Component	P/N	Supplier	Value	Size
C1	GRM1555C1H5R6CA01D	Murata	5.6pF	0402
C2	GRM1555C1H180JA01D	Murata	18pF	0402
C3 – C5	GRM1555C1H102JA01D	Murata	0.001uF	0402
C6	GRM155R71C104KA88D	Murata	0.1uF	0402
L1 , L2	0805CS-030XJLC	Coilcraft	3.3nH	0805

ML1 to ML7 are short mircrostrip lines. Refer to PL-588

PRODUCT MARKING

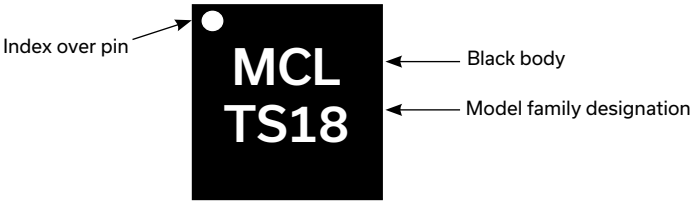

Marking may contain other features or characters for internal lot control

ADDITIONAL DETAILED TECHNICAL INFORMATION IS AVAILABLE ON OUR DASH BOARD. TO ACCESS CLICK HERE

Performance Data	Data Table Swept Graphs S-Parameter (S2P Files) Data Set (.zip file)
Case Style	DQ849 Plastic package, exposed paddle, lead finish: matte-tin
Tape & Reel **Standard quantities available on reel**	F104 7" reels with 20, 50, 100, 200, 500, 1K, or 2K devices
Suggested Layout for PCB Design	PL-588
Evaluation Board	TB-969+
Environmental Ratings	ENV08T1

ESD RATING

Human Body Model (HBM): 1A (250 to <500V) in accordance with ANSI/ESD STM 5.1 - 2001

MSL FLOW CHART

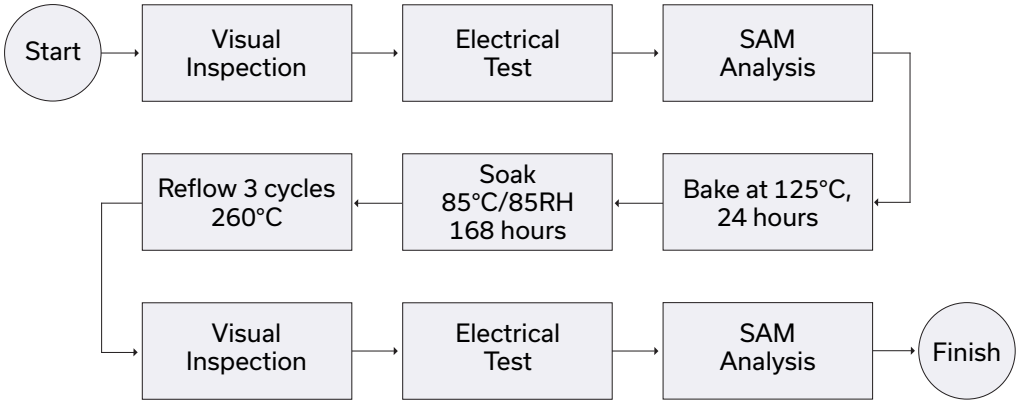

NOTES

A. Performance and quality attributes and conditions not expressly stated in this specification document are intended to be excluded and do not form a part of this specification document.
B. Electrical specifications and performance data contained in this specification document are based on Mini-Circuit's applicable established test performance criteria and measurement instructions.
C. The parts covered by this specification document are subject to Mini-Circuits standard limited warranty and terms and conditions (collectively, "Standard Terms"); Purchasers of this part are entitled to the rights and benefits contained therein. For a full statement of the standard. Terms and the exclusive rights and remedies thereunder, please visit Mini-Circuits' website at www.minicircuits.com/MCLStore/terms.jsp

Typical Performance Data

NOTE: Use PDF Bookmarks to view DATA at required conditions

Definitions:
Input Return Loss = -S11 (dB)
Gain(Power Gain) = S21 (dB)
Reverse Isolation = -S12 (dB)
Output Return Loss = -S22 (dB)

TEST CONDITIONS: Vd = 5.00V, Id = 146.84mA @ Temperature = +25°C

FREQ	Gain	Isolation	Input Return Loss	Output Return Loss	Stability		IP-3 Output	1dB Comp. Output	Noise Figure
(MHz)	(dB)	(dB)	(dB)	(dB)	K	Measure	(dBm)	(dBm)	(dB)
4000	8.47	46.26	6.04	3.09	15.13	0.63	19.94	12.32	15.72
4200	10.18	46.24	6.57	4.01	15.18	0.73	22.46	14.36	13.17
4400	11.25	45.32	7.36	5.08	14.43	0.81	25.86	15.69	11.19
4600	12.14	44.16	8.42	6.27	13.22	0.87	27.37	16.48	9.61
4800	12.85	42.92	9.72	7.55	11.87	0.90	31.28	17.22	8.33
5000	13.41	42.06	11.19	8.85	10.99	0.93	31.79	17.35	7.40
5200	13.83	41.15	12.86	10.14	10.04	0.94	41.38	17.98	6.78
5400	14.14	40.36	14.44	11.14	9.18	0.95	38.21	17.84	6.12
5600	14.36	39.78	16.02	11.93	8.58	0.95	36.96	17.92	5.73
5800	14.51	39.38	17.53	12.38	8.17	0.95	37.05	18.14	5.31
6000	14.65	38.85	18.98	12.75	7.64	0.95	34.76	18.42	5.04
6500	14.80	38.09	21.58	12.96	6.93	0.95	33.31	18.48	4.58
7000	14.90	37.57	25.18	13.32	6.50	0.95	32.29	18.52	4.36
7500	14.94	37.52	33.42	14.05	6.50	0.96	30.81	18.86	4.09
8000	14.90	37.16	32.09	14.72	6.31	0.96	31.23	18.11	4.01
8500	14.79	36.99	23.24	15.49	6.27	0.97	30.34	18.18	4.02
9000	14.65	37.25	19.12	16.24	6.55	0.98	30.02	18.04	4.17
9500	14.48	37.24	16.70	16.48	6.62	0.99	29.48	18.39	4.23
10000	14.25	36.99	15.31	16.58	6.56	1.00	28.88	18.85	4.35
10500	14.03	37.26	14.13	16.04	6.85	1.01	28.33	18.69	4.47
11000	13.88	36.83	13.58	15.06	6.56	1.00	28.14	18.81	4.54
11500	13.74	37.09	13.52	14.49	6.83	1.00	27.97	19.17	4.59
12000	13.77	36.98	13.90	14.58	6.76	1.00	27.28	18.91	4.63
12500	13.71	36.22	14.46	14.85	6.28	0.99	27.49	17.84	4.68
13000	13.63	35.22	15.00	15.05	5.70	0.99	27.77	17.88	4.77
13500	13.58	34.72	15.59	15.22	5.43	0.99	26.70	19.07	4.78
14000	13.68	35.76	15.04	13.58	5.95	0.98	26.57	18.68	4.86
14500	13.79	35.31	15.25	13.23	5.57	0.97	26.83	18.99	4.87
15000	13.87	34.73	15.21	12.67	5.14	0.96	27.96	19.20	4.93
15500	13.93	34.24	14.63	12.32	4.79	0.96	26.53	19.52	5.13
16000	14.01	34.24	13.69	11.75	4.68	0.96	26.90	18.33	5.11
16500	14.03	33.84	12.08	11.20	4.35	0.96	27.93	18.11	5.24
17000	13.93	33.73	10.52	10.39	4.17	0.96	26.16	19.15	5.37
17500	13.69	33.32	9.03	9.71	3.88	0.98	25.75	19.17	5.57
18000	13.30	33.02	7.46	8.91	3.60	1.00	27.98	18.16	5.80
18500	12.70	33.29	6.32	8.45	3.63	1.04	28.10	18.00	6.08
19000	11.95	33.38	5.39	8.56	3.67	1.10	27.09	17.92	6.33
19500	11.04	33.69	4.78	9.11	3.95	1.17	27.80	17.52	6.59
20000	10.13	34.30	4.22	9.95	4.41	1.25	31.31	16.64	6.87
20500	8.95	34.57	3.97	10.27	5.04	1.28	28.59	16.06	7.13
21000	7.74	34.32	3.97	10.10	5.59	1.28	25.57	15.06	7.41

Typical Performance Data

Definitions:
Input Return Loss = -S11 (dB)
Gain(Power Gain) = S21 (dB)
Reverse Isolation = -S12 (dB)
Output Return Loss = -S22 (dB)

TEST CONDITIONS: Vd = 4.75V, Id = 146.70mA @ Temperature = +25°C

FREQ	Gain	Isolation	Input Return Loss	Output Return Loss	Stability		IP-3 Output	1dB Comp. Output	Noise Figure
(MHz)	(dB)	(dB)	(dB)	(dB)	K	Measure	(dBm)	(dBm)	(dB)
4000	8.77	46.22	6.10	3.08	14.62	0.62	19.48	12.02	15.62
4200	10.43	46.18	6.59	4.00	14.65	0.73	21.73	14.01	13.07
4400	11.46	45.23	7.36	5.08	13.93	0.81	24.37	15.29	11.10
4600	12.33	44.11	8.41	6.27	12.86	0.87	25.37	16.00	9.50
4800	13.03	42.89	9.70	7.55	11.59	0.90	27.90	16.72	8.26
5000	13.58	42.03	11.17	8.85	10.74	0.93	27.95	16.74	7.28
5200	13.99	41.16	12.83	10.14	9.86	0.94	33.19	17.39	6.70
5400	14.30	40.36	14.40	11.16	9.02	0.95	30.72	17.19	6.04
5600	14.52	39.78	15.98	11.96	8.43	0.95	30.50	17.26	5.61
5800	14.66	39.38	17.48	12.43	8.03	0.95	31.52	17.48	5.21
6000	14.80	38.85	18.94	12.82	7.51	0.95	34.36	17.77	4.96
6500	14.96	38.11	21.50	13.06	6.82	0.95	35.58	17.81	4.51
7000	15.06	37.60	25.01	13.44	6.42	0.95	33.98	17.83	4.26
7500	15.10	37.54	32.69	14.19	6.41	0.96	32.06	18.20	4.01
8000	15.06	37.18	31.80	14.87	6.21	0.96	33.00	17.42	3.93
8500	14.95	37.00	23.35	15.66	6.17	0.97	31.68	17.48	3.97
9000	14.82	37.28	19.21	16.44	6.46	0.98	31.01	17.33	4.08
9500	14.64	37.27	16.79	16.69	6.53	0.99	30.70	17.67	4.14
10000	14.42	37.00	15.38	16.82	6.45	1.00	29.86	18.13	4.26
10500	14.20	37.27	14.21	16.24	6.74	1.01	29.39	17.99	4.35
11000	14.05	36.83	13.69	15.25	6.46	1.00	29.11	18.13	4.42
11500	13.91	37.10	13.63	14.66	6.72	1.00	28.61	18.52	4.50
12000	13.94	36.97	14.03	14.73	6.64	1.00	27.98	18.26	4.54
12500	13.88	36.19	14.61	15.01	6.16	0.99	28.76	17.16	4.61
13000	13.81	35.20	15.16	15.26	5.58	0.99	28.98	17.20	4.64
13500	13.74	34.74	15.79	15.39	5.37	0.99	27.57	18.42	4.72
14000	13.84	35.69	15.21	13.75	5.81	0.98	27.66	18.02	4.78
14500	13.95	35.24	15.47	13.34	5.44	0.97	28.19	18.37	4.77
15000	14.05	34.72	15.42	12.73	5.05	0.96	28.78	18.62	4.85
15500	14.11	34.22	14.87	12.36	4.70	0.96	27.48	18.95	5.01
16000	14.19	34.29	13.93	11.80	4.62	0.95	28.51	17.73	5.00
16500	14.23	33.81	12.28	11.24	4.25	0.96	29.72	17.51	5.13
17000	14.15	33.70	10.73	10.42	4.08	0.96	27.65	18.54	5.22
17500	13.94	33.24	9.21	9.72	3.77	0.97	27.54	18.56	5.49
18000	13.58	32.89	7.62	8.89	3.47	0.99	31.46	17.51	5.68
18500	12.99	33.18	6.43	8.41	3.50	1.03	32.70	17.31	5.94
19000	12.25	33.29	5.48	8.50	3.54	1.09	33.23	17.20	6.21
19500	11.37	33.61	4.82	9.08	3.79	1.17	28.47	16.75	6.39
20000	10.47	34.27	4.25	10.03	4.25	1.25	26.64	15.85	6.69
20500	9.30	34.57	3.97	10.42	4.85	1.29	24.69	15.24	6.97
21000	8.09	34.35	3.93	10.27	5.38	1.29	22.52	14.23	7.24

Typical Performance Data

Definitions:
Input Return Loss = -S11 (dB)
Gain(Power Gain) = S21 (dB)
Reverse Isolation = -S12 (dB)
Output Return Loss = -S22 (dB)

TEST CONDITIONS: Vd = 5.25V, Id = 147.72mA @ Temperature = +25°C

FREQ	Gain	Isolation	Input Return Loss	Output Return Loss	Stability		IP-3 Output	1dB Comp. Output	Noise Figure
(MHz)	(dB)	(dB)	(dB)	(dB)	K	Measure	(dBm)	(dBm)	(dB)
4000	8.35	46.19	5.98	3.07	15.11	0.63	20.41	12.64	15.70
4200	10.02	46.26	6.51	3.99	15.40	0.73	23.22	14.71	13.17
4400	11.10	45.34	7.31	5.07	14.67	0.81	27.59	16.03	11.19
4600	12.00	44.23	8.38	6.26	13.51	0.87	29.77	16.84	9.58
4800	12.73	42.99	9.68	7.53	12.11	0.90	35.25	17.60	8.32
5000	13.29	42.12	11.17	8.81	11.19	0.93	41.33	17.79	7.36
5200	13.71	41.23	12.84	10.08	10.24	0.94	34.80	18.39	6.73
5400	14.04	40.42	14.43	11.06	9.34	0.95	35.88	18.29	6.06
5600	14.26	39.83	16.02	11.81	8.71	0.95	35.74	18.38	5.65
5800	14.41	39.42	17.53	12.23	8.29	0.95	34.14	18.59	5.28
6000	14.55	38.87	19.01	12.57	7.72	0.95	32.66	18.88	5.04
6500	14.71	38.10	21.59	12.75	6.99	0.95	31.91	18.97	4.57
7000	14.81	37.59	25.37	13.09	6.57	0.95	31.28	19.01	4.33
7500	14.85	37.46	34.70	13.79	6.51	0.95	30.32	19.38	4.08
8000	14.80	37.25	32.26	14.47	6.43	0.96	30.22	18.61	4.01
8500	14.68	37.14	23.01	15.20	6.44	0.97	29.55	18.69	4.04
9000	14.53	37.41	18.82	15.92	6.74	0.98	29.03	18.57	4.15
9500	14.34	37.37	16.39	16.18	6.80	0.99	28.81	18.94	4.24
10000	14.10	36.98	15.00	16.22	6.64	1.00	28.38	19.40	4.33
10500	13.86	37.37	13.85	15.77	7.04	1.01	27.84	19.27	4.44
11000	13.70	36.96	13.32	14.86	6.76	1.00	27.72	19.39	4.48
11500	13.55	37.20	13.24	14.28	7.04	1.00	27.75	19.75	4.57
12000	13.55	37.10	13.57	14.36	6.99	1.00	27.07	19.52	4.63
12500	13.49	36.32	14.13	14.61	6.49	0.99	26.93	18.45	4.70
13000	13.40	35.34	14.55	14.85	5.90	0.99	27.04	18.48	4.74
13500	13.33	34.79	15.08	15.07	5.61	0.99	26.47	19.66	4.79
14000	13.42	35.86	14.63	13.43	6.16	0.98	26.16	19.30	4.86
14500	13.50	35.56	14.80	13.00	5.89	0.97	26.28	19.61	4.89
15000	13.57	34.89	14.70	12.49	5.39	0.96	27.00	19.81	4.96
15500	13.61	34.40	14.20	12.21	5.03	0.96	25.93	20.15	5.14
16000	13.68	34.48	13.28	11.71	4.96	0.96	25.94	18.97	5.09
16500	13.69	34.06	11.73	11.23	4.61	0.97	26.50	18.75	5.24
17000	13.60	33.94	10.30	10.47	4.42	0.97	25.51	19.75	5.36
17500	13.38	33.46	8.89	9.82	4.07	0.98	24.94	19.75	5.59
18000	13.02	33.16	7.39	8.95	3.76	1.00	25.87	18.73	5.76
18500	12.44	33.42	6.33	8.45	3.80	1.04	25.90	18.56	6.11
19000	11.74	33.48	5.41	8.42	3.79	1.09	25.21	18.50	6.35
19500	10.90	33.74	4.82	8.85	4.02	1.16	25.29	18.12	6.54
20000	10.03	34.35	4.27	9.57	4.47	1.24	26.66	17.25	6.87
20500	8.90	34.55	4.00	9.85	5.01	1.27	30.09	16.67	7.12
21000	7.73	34.27	3.96	9.73	5.49	1.27	28.11	15.66	7.39

Typical Performance Data

Definitions:
Input Return Loss = -S11 (dB)
Gain(Power Gain) = S21 (dB)
Reverse Isolation = -S12 (dB)
Output Return Loss = -S22 (dB)

TEST CONDITIONS: Vd = 5.00V, Id = 141.76mA @ Temperature = -45°C

FREQ	Gain	Isolation	Input Return Loss	Output Return Loss	Stability		IP-3 Output	1dB Comp. Output	Noise Figure
(MHz)	(dB)	(dB)	(dB)	(dB)	K	Measure	(dBm)	(dBm)	(dB)
4000	11.53	45.69	6.67	2.78	9.81	0.56	19.46	11.37	14.71
4200	12.72	45.64	6.66	3.65	10.13	0.68	21.53	13.62	12.07
4400	13.34	44.83	7.20	4.76	10.34	0.78	24.18	15.13	10.06
4600	13.97	43.77	8.08	5.94	9.91	0.85	25.40	16.02	8.49
4800	14.53	42.74	9.25	7.22	9.32	0.89	26.54	16.73	7.24
5000	14.98	41.93	10.58	8.44	8.82	0.92	27.26	16.96	6.29
5200	15.33	41.14	12.01	9.75	8.28	0.94	28.19	17.58	5.70
5400	15.61	40.39	13.51	10.77	7.67	0.95	28.48	17.48	5.04
5600	15.80	39.88	14.83	11.57	7.27	0.95	28.54	17.49	4.65
5800	15.92	39.53	16.21	12.09	7.00	0.95	28.71	17.62	4.25
6000	16.08	38.94	17.92	12.81	6.55	0.95	29.03	17.84	4.01
6500	16.22	38.24	20.51	13.51	6.03	0.96	29.50	18.22	3.59
7000	16.34	37.75	24.19	14.49	5.70	0.96	29.78	18.08	3.35
7500	16.38	37.66	28.74	14.97	5.65	0.96	29.80	18.63	3.14
8000	16.35	37.40	29.78	15.17	5.52	0.96	30.21	17.85	3.03
8500	16.27	37.17	24.18	15.55	5.43	0.97	30.16	17.86	3.07
9000	16.18	37.41	20.22	16.53	5.64	0.98	30.44	17.97	3.17
9500	16.06	37.37	17.62	16.82	5.65	0.99	30.51	18.17	3.21
10000	15.87	37.09	16.17	17.07	5.56	0.99	30.79	18.48	3.32
10500	15.68	37.12	15.26	16.45	5.65	1.00	30.86	18.70	3.39
11000	15.58	36.77	15.59	15.24	5.47	0.99	30.72	18.82	3.46
11500	15.52	36.91	16.44	15.16	5.62	0.98	30.67	19.02	3.46
12000	15.57	36.73	16.72	15.80	5.51	0.98	30.84	18.89	3.50
12500	15.54	36.09	16.10	17.41	5.17	0.99	31.22	17.52	3.55
13000	15.50	35.15	15.45	18.37	4.67	1.00	31.06	17.69	3.64
13500	15.44	34.79	14.92	17.56	4.49	1.00	31.00	18.23	3.68
14000	15.48	35.61	14.67	13.83	4.78	0.97	31.36	18.03	3.75
14500	15.61	35.40	15.16	12.52	4.56	0.95	31.25	18.35	3.75
15000	15.79	34.63	17.39	11.60	4.09	0.93	29.35	18.49	3.79
15500	15.96	34.00	20.01	11.49	3.76	0.92	30.76	18.61	3.86
16000	16.19	33.87	19.00	11.22	3.59	0.91	30.37	17.93	3.84
16500	16.41	33.25	15.65	11.29	3.25	0.92	31.10	18.13	3.96
17000	16.51	32.93	12.77	10.68	3.01	0.92	31.12	17.96	4.07
17500	16.41	32.50	10.23	9.49	2.74	0.92	31.91	18.68	4.38
18000	16.06	32.23	8.06	7.30	2.43	0.87	30.91	18.52	4.59
18500	15.44	32.63	6.73	6.32	2.40	0.87	31.92	18.05	4.88
19000	14.83	32.71	5.89	6.15	2.33	0.92	30.18	17.82	5.00
19500	14.18	32.87	5.26	7.02	2.43	1.04	31.37	17.26	5.15
20000	13.79	33.27	4.80	9.61	2.71	1.21	33.35	17.07	5.20
20500	12.94	33.74	4.25	12.00	3.09	1.31	31.48	16.64	5.26
21000	11.98	33.77	4.17	13.72	3.56	1.34	26.71	15.87	5.34

Typical Performance Data

Definitions:
Input Return Loss = -S11 (dB)
Gain(Power Gain) = S21 (dB)
Reverse Isolation = -S12 (dB)
Output Return Loss = -S22 (dB)

TEST CONDITIONS: Vd = 4.75V, Id = 140.02mA @ Temperature = -45°C

FREQ	Gain	Isolation	Input Return Loss	Output Return Loss	Stability		IP-3 Output	1dB Comp. Output	Noise Figure
(MHz)	(dB)	(dB)	(dB)	(dB)	K	Measure	(dBm)	(dBm)	(dB)
4000	12.71	45.53	7.10	2.78	8.66	0.55	18.96	10.42	14.75
4200	13.63	45.33	6.76	3.62	8.85	0.67	20.83	12.71	12.09
4400	14.06	44.61	7.19	4.74	9.27	0.78	22.98	14.22	10.09
4600	14.59	43.63	8.03	5.91	9.06	0.85	24.01	15.08	8.47
4800	15.10	42.62	9.16	7.18	8.59	0.89	25.07	15.79	7.23
5000	15.52	41.89	10.45	8.40	8.23	0.92	25.56	15.99	6.30
5200	15.84	41.18	11.85	9.70	7.82	0.94	26.55	16.64	5.71
5400	16.11	40.37	13.28	10.73	7.22	0.95	26.68	16.51	5.04
5600	16.29	39.89	14.56	11.53	6.87	0.95	26.67	16.52	4.65
5800	16.40	39.55	15.86	12.04	6.63	0.95	26.80	16.62	4.27
6000	16.55	39.04	17.50	12.78	6.26	0.95	27.10	16.83	4.02
6500	16.69	38.29	19.90	13.49	5.74	0.96	27.49	17.19	3.59
7000	16.81	37.80	22.97	14.48	5.44	0.96	27.58	17.05	3.37
7500	16.85	37.73	26.28	14.95	5.40	0.96	27.61	17.64	3.12
8000	16.82	37.46	26.93	15.13	5.26	0.96	27.75	16.86	3.05
8500	16.75	37.19	23.54	15.48	5.15	0.96	27.60	16.86	3.03
9000	16.68	37.47	20.19	16.48	5.36	0.98	27.67	16.92	3.15
9500	16.57	37.35	17.85	16.72	5.33	0.98	27.76	17.08	3.20
10000	16.38	36.90	16.47	16.94	5.16	0.99	27.94	17.43	3.32
10500	16.22	37.19	15.78	16.51	5.39	0.99	27.94	17.63	3.38
11000	16.13	36.70	16.29	15.23	5.13	0.98	27.90	17.76	3.46
11500	16.06	36.82	17.18	15.23	5.26	0.98	28.16	17.96	3.47
12000	16.12	36.59	17.37	15.83	5.11	0.98	28.16	17.85	3.49
12500	16.10	35.96	16.50	17.49	4.79	0.99	28.00	16.50	3.51
13000	16.07	35.01	15.99	18.61	4.33	0.99	28.05	16.68	3.61
13500	16.02	34.70	15.64	17.72	4.19	0.99	28.33	17.15	3.67
14000	16.07	35.47	15.46	13.80	4.43	0.97	28.17	16.93	3.75
14500	16.23	35.22	16.36	12.61	4.20	0.95	28.26	17.23	3.76
15000	16.41	34.57	19.24	11.53	3.81	0.92	26.96	17.07	3.80
15500	16.59	33.88	22.07	11.46	3.47	0.91	27.98	17.32	3.89
16000	16.86	33.66	19.58	11.13	3.26	0.90	27.27	16.70	3.84
16500	17.11	32.99	16.29	11.13	2.92	0.91	27.37	16.92	3.97
17000	17.32	32.64	13.62	10.42	2.69	0.90	27.60	16.58	4.10
17500	17.33	32.09	11.36	9.08	2.41	0.87	28.45	17.24	4.37
18000	17.09	31.71	9.07	6.80	2.11	0.80	26.87	17.33	4.57
18500	16.53	32.08	7.53	5.76	2.05	0.79	26.92	16.93	4.87
19000	16.01	32.12	6.53	5.64	1.96	0.84	27.86	16.74	4.98
19500	15.46	32.25	5.75	6.66	2.02	0.98	27.94	16.17	5.14
20000	15.13	32.57	5.08	9.85	2.23	1.20	26.22	16.04	5.18
20500	14.24	33.30	4.29	13.14	2.60	1.32	25.91	15.60	5.24
21000	13.20	33.62	4.09	15.22	3.08	1.35	24.10	14.79	5.24

Typical Performance Data

Definitions:
Input Return Loss = -S11 (dB)
Gain(Power Gain) = S21 (dB)
Reverse Isolation = -S12 (dB)
Output Return Loss = -S22 (dB)

TEST CONDITIONS: Vd = 5.25V, Id = 143.18mA @ Temperature = -45°C

FREQ	Gain	Isolation	Input Return Loss	Output Return Loss	Stability		IP-3 Output	1dB Comp. Output	Noise Figure
(MHz)	(dB)	(dB)	(dB)	(dB)	K	Measure	(dBm)	(dBm)	(dB)
4000	10.66	45.86	6.39	2.77	10.79	0.57	20.07	12.07	14.76
4200	12.02	45.81	6.58	3.66	11.14	0.68	22.43	14.31	12.14
4400	12.78	45.00	7.19	4.77	11.23	0.78	25.76	15.78	10.14
4600	13.48	43.88	8.11	5.95	10.63	0.85	27.18	16.69	8.52
4800	14.09	42.78	9.30	7.22	9.88	0.89	28.56	17.42	7.27
5000	14.56	42.00	10.65	8.43	9.34	0.92	29.64	17.72	6.32
5200	14.93	41.20	12.13	9.72	8.74	0.94	30.73	18.25	5.74
5400	15.22	40.36	13.66	10.74	8.01	0.95	31.27	18.25	5.07
5600	15.41	39.83	15.02	11.53	7.56	0.95	31.43	18.27	4.68
5800	15.54	39.45	16.44	12.02	7.25	0.95	31.78	18.40	4.29
6000	15.70	38.93	18.23	12.74	6.83	0.95	32.37	18.61	4.07
6500	15.86	38.16	20.95	13.43	6.23	0.95	33.37	19.05	3.61
7000	15.98	37.64	25.26	14.40	5.87	0.96	34.11	18.91	3.42
7500	16.01	37.58	31.87	14.85	5.84	0.96	34.36	19.42	3.12
8000	15.97	37.34	33.05	15.01	5.71	0.96	36.15	18.67	3.08
8500	15.87	37.15	24.65	15.38	5.66	0.97	35.28	18.71	3.11
9000	15.78	37.46	19.97	16.41	5.92	0.98	36.75	18.88	3.20
9500	15.64	37.30	17.28	16.61	5.86	0.99	36.30	19.06	3.24
10000	15.42	36.96	15.65	16.80	5.74	1.00	34.78	19.32	3.36
10500	15.24	37.18	14.71	16.30	5.95	1.00	34.44	19.56	3.46
11000	15.14	36.74	15.03	15.06	5.71	0.99	33.81	19.70	3.48
11500	15.06	36.89	15.77	15.05	5.88	0.98	32.73	19.88	3.51
12000	15.10	36.75	16.11	15.69	5.80	0.99	31.72	19.78	3.54
12500	15.06	36.12	15.50	17.31	5.45	1.00	31.49	18.41	3.57
13000	15.00	35.17	14.78	18.31	4.92	1.00	31.50	18.61	3.65
13500	14.92	34.86	14.12	17.38	4.76	1.00	30.44	19.17	3.73
14000	14.95	35.72	13.76	13.65	5.09	0.98	30.21	19.00	3.81
14500	15.07	35.39	14.23	12.48	4.80	0.96	30.27	19.38	3.80
15000	15.22	34.77	16.12	11.52	4.39	0.93	29.78	19.64	3.84
15500	15.37	34.12	18.40	11.49	4.05	0.92	29.02	19.68	3.93
16000	15.59	34.04	17.60	11.29	3.90	0.92	28.96	18.99	3.88
16500	15.75	33.38	14.70	11.47	3.53	0.93	29.12	19.21	4.01
17000	15.81	33.20	11.74	10.96	3.32	0.94	28.67	19.03	4.16
17500	15.61	32.79	9.31	9.76	3.03	0.95	27.55	19.67	4.45
18000	15.18	32.54	7.35	7.57	2.70	0.92	27.76	19.40	4.64
18500	14.51	33.03	6.23	6.57	2.71	0.92	28.19	18.85	4.94
19000	13.89	33.09	5.52	6.33	2.63	0.96	26.90	18.61	5.05
19500	13.22	33.24	5.00	7.04	2.75	1.06	26.10	18.06	5.19
20000	12.82	33.53	4.66	9.27	3.03	1.20	26.91	17.89	5.28
20500	12.04	33.85	4.25	11.27	3.43	1.29	28.42	17.48	5.36
21000	11.16	33.71	4.23	12.98	3.87	1.32	34.38	16.75	5.43

Typical Performance Data

Definitions:
Input Return Loss = -S11 (dB)
Gain(Power Gain) = S21 (dB)
Reverse Isolation = -S12 (dB)
Output Return Loss = -S22 (dB)

TEST CONDITIONS: Vd = 5.00V, Id = 146.02mA @ Temperature = +85°C

FREQ	Gain	Isolation	Input Return Loss	Output Return Loss	Stability		IP-3 Output	1dB Comp. Output	Noise Figure
(MHz)	(dB)	(dB)	(dB)	(dB)	K	Measure	(dBm)	(dBm)	(dB)
4000	7.34	46.41	6.02	3.36	18.47	0.67	19.84	12.11	16.36
4200	9.17	46.36	6.70	4.31	18.15	0.76	22.23	14.10	13.90
4400	10.35	45.33	7.58	5.39	16.65	0.83	25.29	15.37	11.95
4600	11.30	44.17	8.69	6.56	14.99	0.88	26.83	16.16	10.39
4800	12.05	42.90	10.03	7.81	13.22	0.91	30.16	16.90	9.14
5000	12.63	41.97	11.51	9.07	12.04	0.93	30.41	17.02	8.18
5200	13.06	41.04	13.12	10.30	10.90	0.94	36.42	17.56	7.55
5400	13.39	40.24	14.66	11.28	9.90	0.95	33.87	17.51	6.87
5600	13.63	39.67	16.36	12.04	9.24	0.95	33.75	17.67	6.43
5800	13.80	39.14	17.88	12.49	8.64	0.95	34.56	17.95	6.00
6000	13.94	38.65	19.32	12.77	8.10	0.95	35.05	18.22	5.79
6500	14.11	37.94	21.52	12.83	7.35	0.95	34.75	18.01	5.28
7000	14.18	37.34	24.27	13.03	6.84	0.95	33.00	18.34	5.08
7500	14.21	37.23	32.85	13.84	6.82	0.95	31.82	18.49	4.83
8000	14.16	36.98	29.92	14.84	6.72	0.96	32.10	17.93	4.77
8500	14.04	36.88	22.35	15.63	6.74	0.97	31.03	18.00	4.82
9000	13.87	37.18	18.68	16.03	7.08	0.98	31.10	17.57	4.97
9500	13.70	36.94	16.61	15.71	6.96	0.99	30.46	18.02	5.04
10000	13.46	37.01	15.32	15.86	7.16	1.00	29.59	18.70	5.18
10500	13.25	37.16	14.37	15.37	7.39	1.00	29.20	18.33	5.29
11000	13.08	36.64	13.59	14.73	7.01	1.00	29.18	18.36	5.38
11500	12.93	37.13	13.15	14.08	7.47	1.00	28.83	18.60	5.47
12000	12.90	36.89	13.25	14.06	7.30	1.00	28.23	18.28	5.54
12500	12.83	36.25	13.73	14.26	6.88	1.00	28.24	17.89	5.62
13000	12.78	35.22	14.68	14.40	6.22	0.99	28.65	17.57	5.70
13500	12.72	34.64	16.46	14.71	5.93	0.98	27.62	18.52	5.73
14000	12.84	35.55	16.90	13.65	6.45	0.97	27.36	18.43	5.78
14500	12.95	35.37	17.39	13.59	6.26	0.97	28.12	18.48	5.76
15000	13.04	34.63	15.84	13.43	5.65	0.97	28.11	18.65	5.90
15500	13.02	34.40	13.61	12.74	5.39	0.97	27.02	19.04	6.11
16000	12.98	34.54	11.58	11.82	5.30	0.98	27.09	18.36	6.12
16500	12.82	34.30	9.83	10.47	4.96	0.98	28.29	17.84	6.32
17000	12.57	34.30	8.64	9.30	4.78	0.98	26.66	18.84	6.42
17500	12.22	33.95	7.82	8.36	4.48	0.97	26.95	18.20	6.64
18000	11.87	33.71	7.22	8.03	4.30	0.99	28.42	17.31	6.72
18500	11.46	33.62	6.73	8.42	4.35	1.03	28.63	17.38	6.87
19000	10.87	33.57	6.25	9.52	4.60	1.10	29.03	17.29	7.04
19500	10.08	33.65	5.67	11.17	5.01	1.18	31.94	17.06	7.26
20000	9.09	34.22	5.12	12.81	5.85	1.25	31.42	16.16	7.56
20500	7.72	34.35	4.69	12.92	6.63	1.28	30.96	15.43	7.96
21000	6.10	34.20	4.33	11.86	7.36	1.29	26.74	14.31	8.52

Typical Performance Data

Definitions:
Input Return Loss = -S11 (dB)
Gain(Power Gain) = S21 (dB)
Reverse Isolation = -S12 (dB)
Output Return Loss = -S22 (dB)

TEST CONDITIONS: Vd = 4.75V, Id = 146.11mA @ Temperature = +85°C

FREQ	Gain	Isolation	Input Return Loss	Output Return Loss	Stability		IP-3 Output	1dB Comp. Output	Noise Figure
(MHz)	(dB)	(dB)	(dB)	(dB)	K	Measure	(dBm)	(dBm)	(dB)
4000	7.52	46.41	6.07	3.37	18.19	0.67	19.48	11.86	16.32
4200	9.35	46.25	6.74	4.32	17.62	0.76	21.65	13.75	13.87
4400	10.52	45.24	7.61	5.40	16.22	0.83	24.14	14.99	11.92
4600	11.45	44.10	8.71	6.58	14.64	0.88	25.18	15.72	10.35
4800	12.19	42.82	10.05	7.83	12.93	0.91	27.72	16.46	9.11
5000	12.76	41.89	11.53	9.09	11.78	0.93	27.54	16.47	8.15
5200	13.18	40.95	13.14	10.35	10.65	0.94	31.67	17.04	7.53
5400	13.51	40.19	14.67	11.35	9.73	0.95	29.89	16.94	6.84
5600	13.75	39.61	16.35	12.14	9.07	0.95	29.96	17.10	6.40
5800	13.91	39.09	17.89	12.62	8.50	0.95	31.04	17.38	6.00
6000	14.05	38.62	19.31	12.93	7.98	0.95	33.30	17.66	5.74
6500	14.21	37.90	21.50	13.02	7.25	0.95	33.78	17.42	5.27
7000	14.29	37.30	24.16	13.25	6.75	0.95	33.61	17.74	5.04
7500	14.32	37.22	31.76	14.12	6.75	0.96	33.01	17.89	4.78
8000	14.27	36.94	29.58	15.16	6.63	0.96	32.84	17.32	4.71
8500	14.16	36.83	22.43	16.01	6.63	0.97	31.91	17.39	4.77
9000	14.00	37.12	18.84	16.42	6.94	0.98	30.68	16.92	4.94
9500	13.84	36.88	16.80	16.04	6.83	0.99	31.21	17.36	4.99
10000	13.61	36.88	15.51	16.12	6.96	1.00	30.54	18.05	5.13
10500	13.41	37.10	14.57	15.62	7.23	1.00	30.26	17.67	5.24
11000	13.25	36.55	13.79	14.96	6.84	1.00	30.23	17.70	5.28
11500	13.10	37.02	13.35	14.27	7.26	1.00	29.67	17.96	5.42
12000	13.08	36.78	13.47	14.23	7.09	1.00	29.08	17.62	5.48
12500	13.02	36.12	13.96	14.44	6.67	0.99	29.50	17.23	5.56
13000	12.98	35.10	14.97	14.58	6.02	0.99	29.65	16.90	5.61
13500	12.93	34.57	16.86	14.89	5.77	0.98	28.48	17.88	5.63
14000	13.05	35.45	17.32	13.80	6.24	0.97	28.41	17.81	5.65
14500	13.19	35.25	17.86	13.74	6.03	0.96	29.27	17.86	5.70
15000	13.28	34.44	16.27	13.54	5.41	0.97	28.56	18.04	5.82
15500	13.27	34.25	13.90	12.81	5.17	0.97	27.87	18.46	6.01
16000	13.24	34.36	11.78	11.81	5.07	0.98	28.43	17.73	6.06
16500	13.09	34.11	9.95	10.39	4.72	0.98	29.89	17.21	6.24
17000	12.83	34.14	8.71	9.19	4.56	0.97	27.84	18.20	6.33
17500	12.48	33.80	7.87	8.27	4.27	0.97	29.05	17.55	6.51
18000	12.12	33.57	7.25	7.99	4.12	0.99	31.50	16.62	6.62
18500	11.71	33.50	6.75	8.44	4.18	1.03	36.84	16.68	6.76
19000	11.10	33.47	6.27	9.68	4.45	1.11	36.12	16.56	6.93
19500	10.30	33.59	5.67	11.45	4.88	1.19	27.10	16.31	7.19
20000	9.28	34.16	5.13	13.23	5.72	1.25	25.95	15.43	7.49
20500	7.88	34.31	4.70	13.38	6.52	1.29	36.00	14.68	7.90
21000	6.25	34.19	4.34	12.23	7.28	1.30	23.50	13.54	8.44

Typical Performance Data

Definitions:
Input Return Loss = -S11 (dB)
Gain(Power Gain) = S21 (dB)
Reverse Isolation = -S12 (dB)
Output Return Loss = -S22 (dB)

TEST CONDITIONS: Vd = 5.25V, Id = 146.63mA @ Temperature = +85°C

FREQ	Gain	Isolation	Input Return Loss	Output Return Loss	Stability		IP-3 Output	1dB Comp. Output	Noise Figure
(MHz)	(dB)	(dB)	(dB)	(dB)	K	Measure	(dBm)	(dBm)	(dB)
4000	7.12	46.35	5.97	3.35	18.70	0.67	20.16	12.47	16.44
4200	8.92	46.34	6.64	4.30	18.53	0.76	22.77	14.47	13.98
4400	10.12	45.46	7.54	5.37	17.30	0.83	26.47	15.77	12.01
4600	11.08	44.38	8.67	6.54	15.71	0.88	28.60	16.59	10.44
4800	11.84	43.09	10.01	7.77	13.82	0.91	32.62	17.35	9.21
5000	12.43	42.13	11.51	9.00	12.50	0.93	34.51	17.53	8.22
5200	12.88	41.16	13.12	10.19	11.25	0.94	37.42	18.07	7.61
5400	13.22	40.37	14.68	11.11	10.23	0.95	37.66	18.05	6.93
5600	13.46	39.76	16.38	11.81	9.49	0.95	36.27	18.24	6.50
5800	13.63	39.27	17.92	12.20	8.89	0.95	34.81	18.49	6.08
6000	13.78	38.77	19.34	12.42	8.32	0.95	33.74	18.77	5.84
6500	13.94	38.00	21.46	12.41	7.50	0.94	33.14	18.58	5.36
7000	14.02	37.38	24.36	12.55	6.97	0.94	31.98	18.92	5.13
7500	14.04	37.30	34.63	13.31	6.97	0.95	31.08	19.05	4.86
8000	13.98	37.02	29.86	14.22	6.86	0.96	30.94	18.53	4.81
8500	13.85	36.94	21.83	14.95	6.90	0.97	30.09	18.62	4.87
9000	13.66	37.22	18.23	15.33	7.24	0.98	29.89	18.20	5.04
9500	13.47	37.07	16.21	15.10	7.20	0.99	29.55	18.69	5.12
10000	13.21	37.08	14.96	15.20	7.37	1.00	28.90	19.37	5.25
10500	12.99	37.35	14.04	14.80	7.72	1.00	28.47	19.00	5.36
11000	12.79	36.85	13.26	14.26	7.37	1.00	28.49	19.03	5.45
11500	12.62	37.33	12.83	13.66	7.85	1.00	28.32	19.26	5.55
12000	12.57	37.11	12.91	13.62	7.70	1.00	27.66	18.94	5.64
12500	12.48	36.45	13.33	13.83	7.27	1.00	27.52	18.60	5.71
13000	12.41	35.39	14.26	13.97	6.56	0.99	27.72	18.27	5.77
13500	12.35	34.85	15.95	14.20	6.29	0.98	27.05	19.22	5.81
14000	12.45	35.83	16.37	13.29	6.92	0.97	26.73	19.17	5.87
14500	12.56	35.62	16.81	13.34	6.70	0.97	27.18	19.22	5.89
15000	12.61	34.78	15.40	13.23	6.01	0.97	27.32	19.39	5.99
15500	12.58	34.63	13.19	12.67	5.79	0.98	26.37	19.78	6.21
16000	12.53	34.80	11.23	11.83	5.71	0.99	26.15	19.14	6.24
16500	12.37	34.53	9.57	10.51	5.32	0.99	26.90	18.59	6.42
17000	12.13	34.58	8.47	9.30	5.15	0.99	25.96	19.53	6.54
17500	11.80	34.16	7.75	8.27	4.76	0.98	25.83	18.82	6.74
18000	11.49	33.85	7.24	7.84	4.52	0.98	26.38	17.93	6.85
18500	11.14	33.73	6.81	8.08	4.53	1.02	26.46	18.01	6.97
19000	10.64	33.61	6.37	9.05	4.71	1.08	26.38	17.91	7.18
19500	9.96	33.67	5.78	10.50	5.07	1.16	28.00	17.71	7.41
20000	9.05	34.17	5.21	12.05	5.82	1.23	28.93	16.85	7.70
20500	7.75	34.25	4.74	12.25	6.50	1.27	28.23	16.10	8.15
21000	6.15	34.17	4.34	11.32	7.22	1.28	33.94	14.93	8.64

Typical Performance Curves

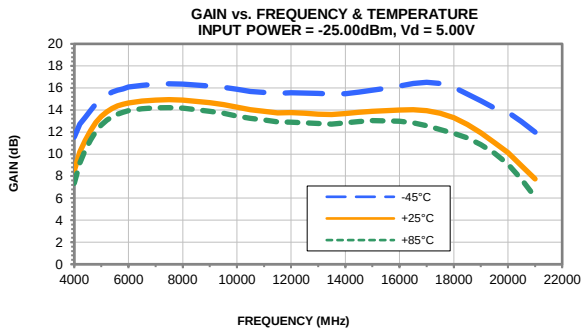

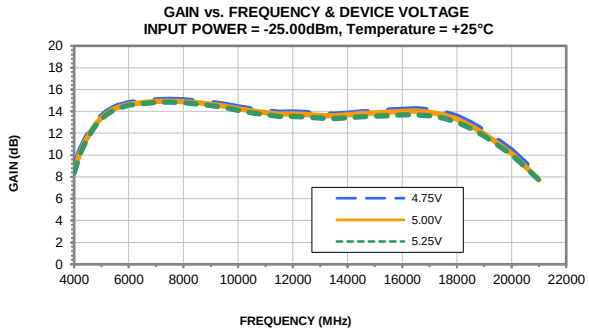

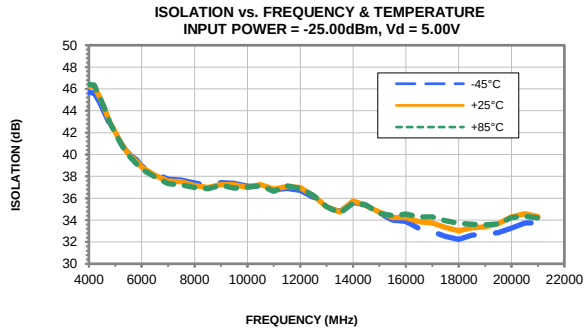

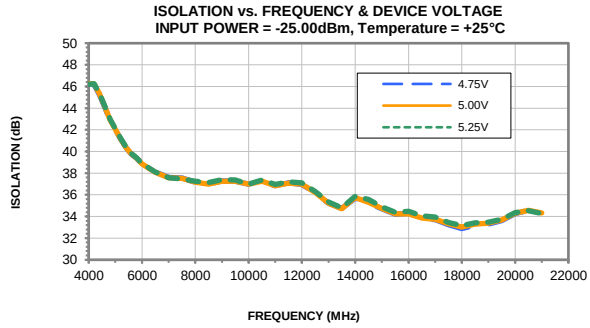

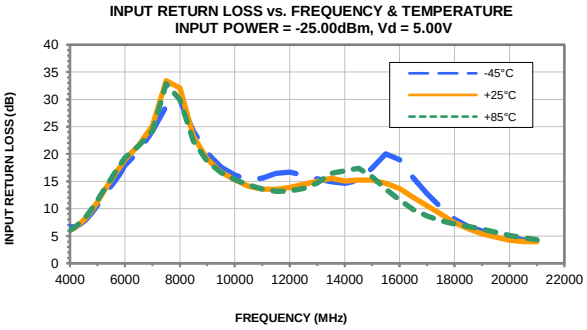

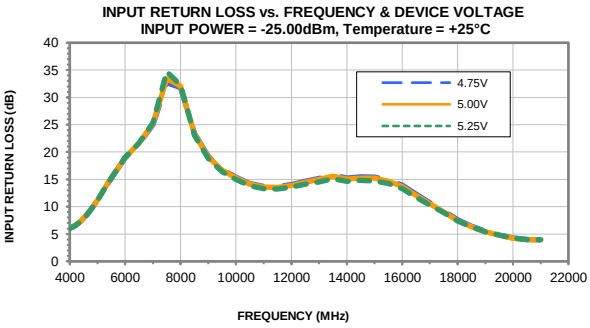

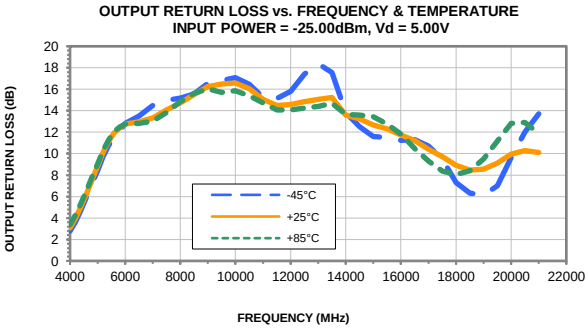

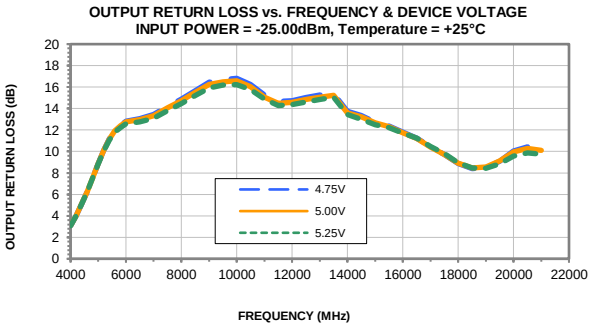

Typical Performance Curves

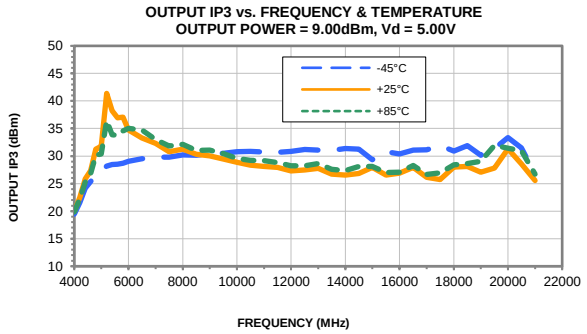

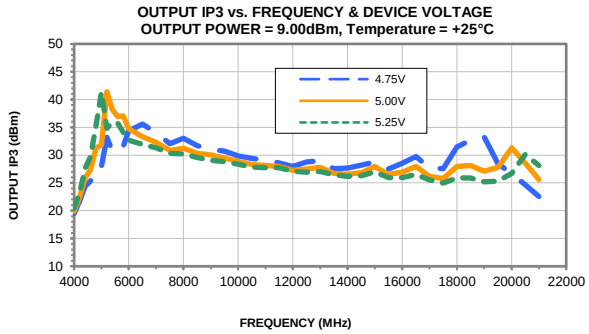

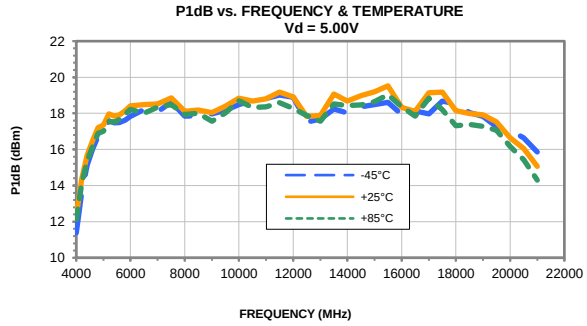

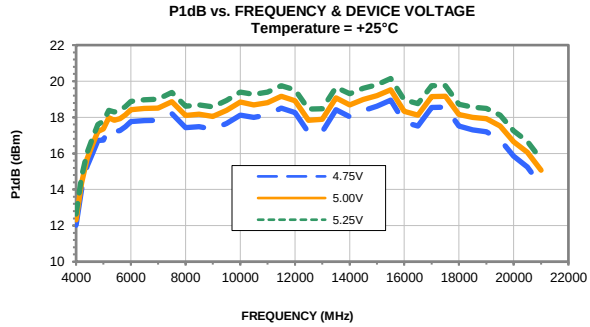

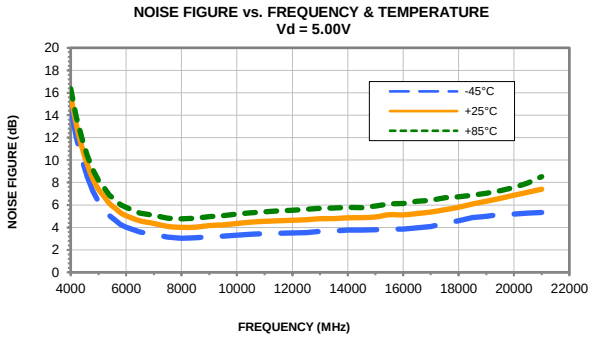

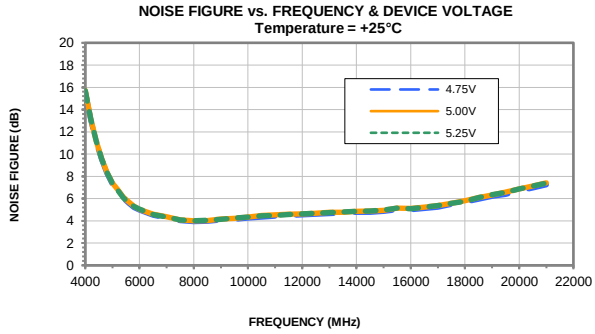

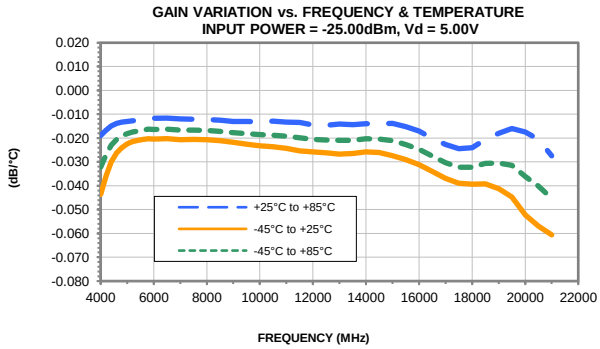

Case Style DQ

DQ849

Outline Dimensions

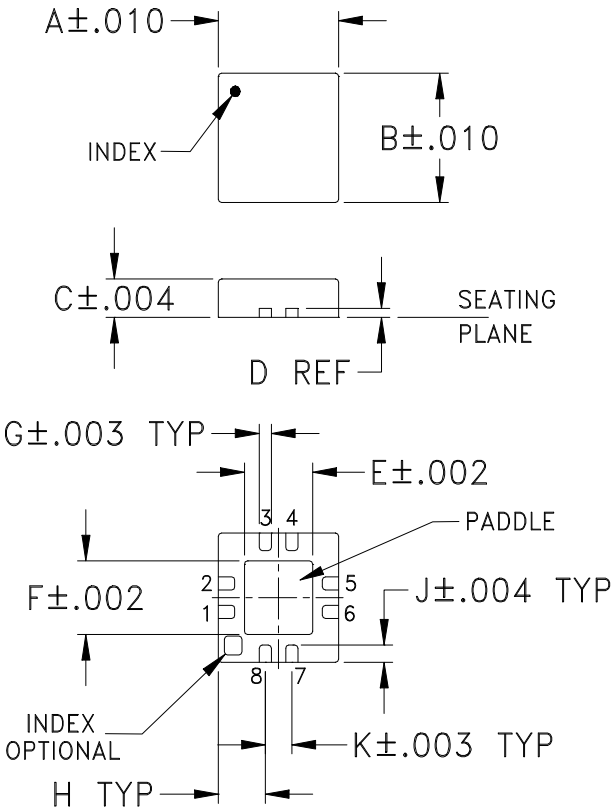

PCB Land Pattern

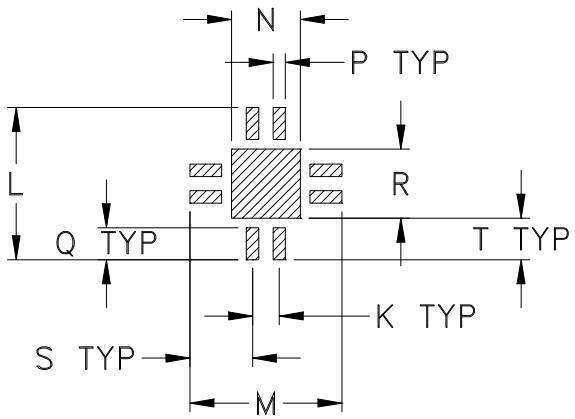

Suggested Layout,
Tolerance to be within ±.002

CASE #	A	B	C	D	E	F	G	H	J	K	L	M	N
DQ849	.118 (3.00)	.118 (3.00)	.035 (0.89)	.008 (0.20)	.067 (1.70)	.067 (1.70)	.012 (0.30)	.046 (1.17)	.016 (0.41)	.026 (0.66)	.148 (3.76)	.148 (3.76)	.067 (1.70)

CASE #	P	Q	R	S	T	WT. GRAM
DQ849	.012 (0.30)	.031 (0.79)	.067 (1.70)	.061 (1.55)	.041 (1.04)	.02

Dimensions are in inches (mm). Tolerances: 2Pl. ± .01; 3 Pl. ± .004

Notes:

1. Case material: Plastic.
2. Termination finish:
   For RoHS Case Styles: Tin-Silver alloy plate over Nickel barrier or Matte-Tin plated. All models, (+) suffix. See Data sheet.
   For RoHS-5 Case Styles: Tin-Lead plate. All models, no (+) suffix.

Mini-Circuits®
INTERNET http://www.minicircuits.com
P.O. Box 350166, Brooklyn, New York 11235-0003 (718) 934-4500 Fax (718) 332-4661
Distribution Centers NORTH AMERICA 800-654-7949 • 417-335-5935 • Fax 417-335-5945 • EUROPE 44-1252-832600 • Fax 44-1252-837010
Mini-Circuits ISO 9001 & ISO 14001 Certified

This document and its contents are the property of Mini-Circuits.

Tape & Reel Packaging TR-F104

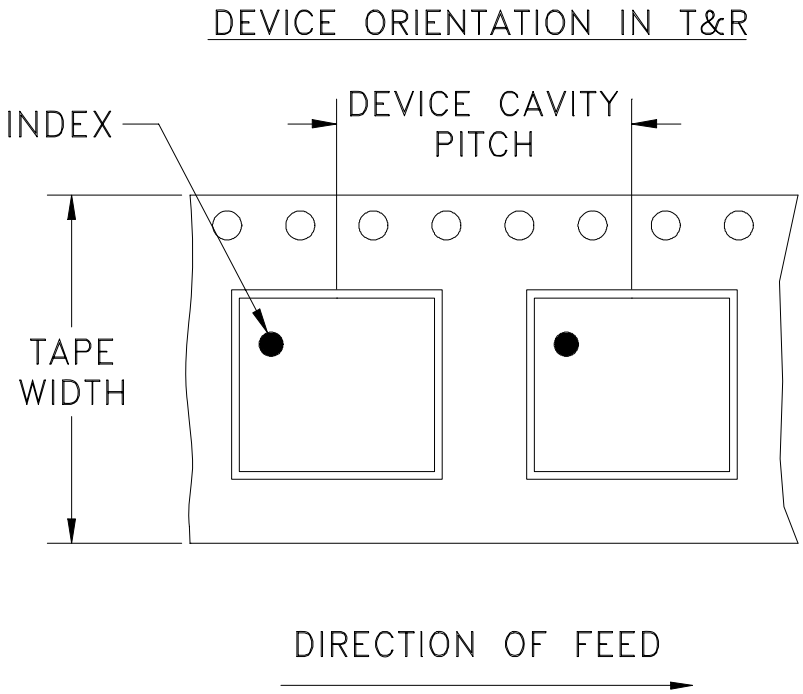

Tape Width, mm	Device Cavity Pitch, mm	Reel Size, inches	Devices per Reel	
8	4	7	Small quantity standards (see note)	20
				50
				100
				200
				500
				1000
		7	Standard	2000

Note: Please Consult individual model data sheet to determine device per reel availability.

Mini-Circuits carrier tape materials provide protection from ESD (Electro-Static Discharge) during handling and transportation. Tapes are static dissipative and comply with industry standards EIA-481/EIA-541.

Go to: www.minicircuits.com/pages/pdfs/tape.pdf

Mini-Circuits®
INTERNET http://www.minicircuits.com
P.O. Box 350166, Brooklyn, New York 11235-0003 (718) 934-4500 Fax (718) 332-4661
Distribution Centers NORTH AMERICA 800-654-7949 • 417-335-5935 • Fax 417-335-5945 • EUROPE 44-1252-832600 • Fax 44-1252-837010
Mini-Circuits ISO 9001 & ISO 14001 Certified

This document and its contents are the property of Mini-Circuits.

THIRD ANGLE PROJECTION

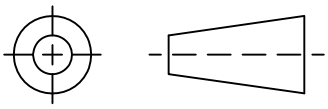

REVISIONS					
REV	ECN No.	DESCRIPTION	DATE	DR	AUTH
OR	M167872	NEW RELEASE	05/16/18	ITG	RS

SUGGESTED MOUNTING CONFIGURATION
FOR DQ849 CASE STYLE, "08AM18" PIN CODE

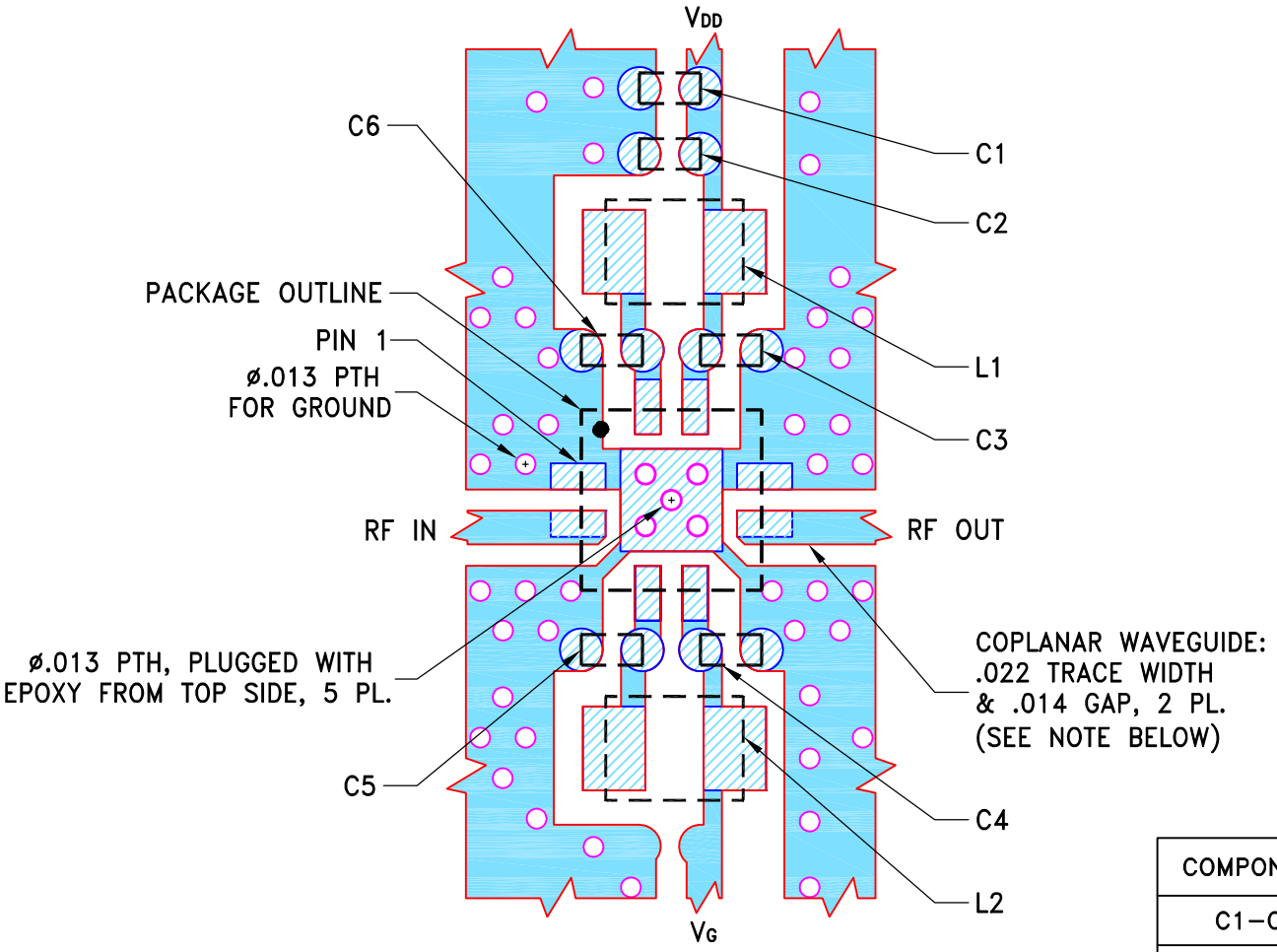

COMPONENT	SIZE
C1–C6	0402
L1,L2	0805

NOTES:

1. TRACE WIDTH & GAP PARAMETERS ARE SHOWN FOR ROGERS RO4350B WITH DIELECTRIC THICKNESS .010"±.001". COPPER: 1/2 OZ. EACH SIDE. FOR OTHER MATERIALS TRACE WIDTH & GAP MAY NEED TO BE MODIFIED.
2. CHIP COMPONENT FOOT PRINTS SHOWN FOR REFERENCE. FOR COMPONENT VALUES REFER TO TB–969+.
3. BOTTOM SIDE OF THE PCB IS CONTINUOUS GROUND PLANE.

DENOTES PCB COPPER LAYOUT WITH SMOBC (SOLDER MASK OVER BARE COPPER).

DENOTES COPPER LAND PATTERN FREE OF SOLDER MASK.

UNLESS OTHERWISE SPECIFIED		INITIALS	DATE
DIMENSIONS ARE IN INCHES	DRAWN	ITG	05/15/18
TOLERANCES ON:	CHECKED	GF	05/16/18
2 PL DECIMALS ±	APPROVED	RS	05/16/18
3 PL DECIMALS ± .005			
ANGLES ±			
FRACTIONS ±			

Mini-Circuits®

THIS DOCUMENT AND ITS CONTENTS ARE THE PROPERTY OF MINI-CIRCUITS. EXCEPT FOR USE EXPRESSLY GRANTED, IN WRITING, TO ITS VENDORS, VENDEE AND THE UNITED STATES GOVERNMENT, MINI-CIRCUITS RESERVES ALL PROPRIETARY DESIGN, USE , MANUFACTURING AND REPRODUCTION RIGHTS THERETO. THESE CONTENTS SHALL NOT BE USED, DUPLICATED OR DISCLOSED TO ANY OUTSIDE PARTY, IN WHOLE OR IN PART, WITHOUT WRITTEN PERMISSION OF MINI-CIRCUITS.

ASHEETA1.DWG REV:A DATE:01/12/95

Mini-Circuits® 13 Neptune Avenue Brooklyn NY 11235

PL, 08AM18, DQ849, TB–969+

SIZE	CODE IDENT	DRAWING NO:	REV:
A	15542	98–PL–588	OR

FILE:	SCALE:	SHEET:
98PL588	8:1	1 OF 1

Evaluation Board and Circuit

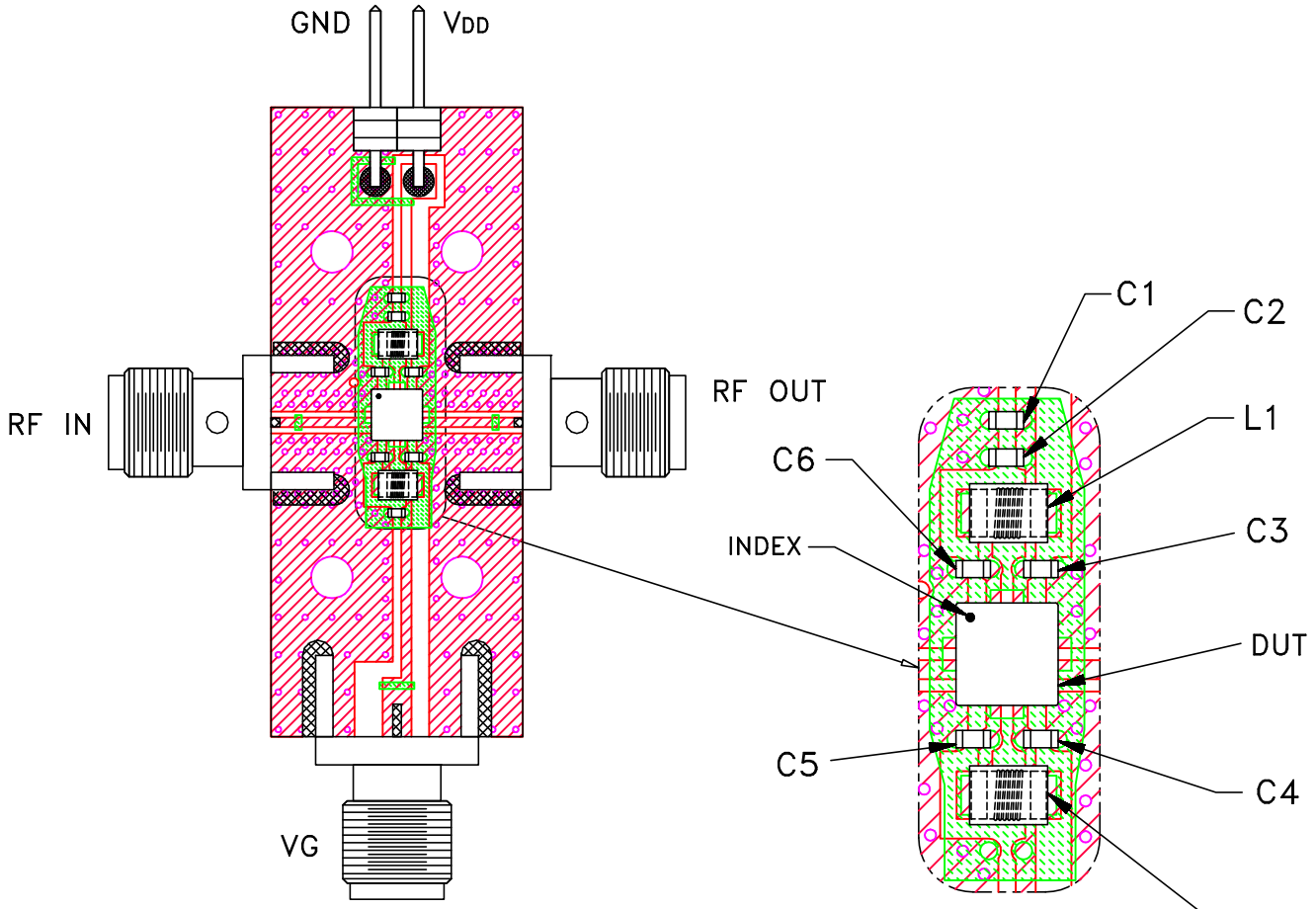

TB-969+

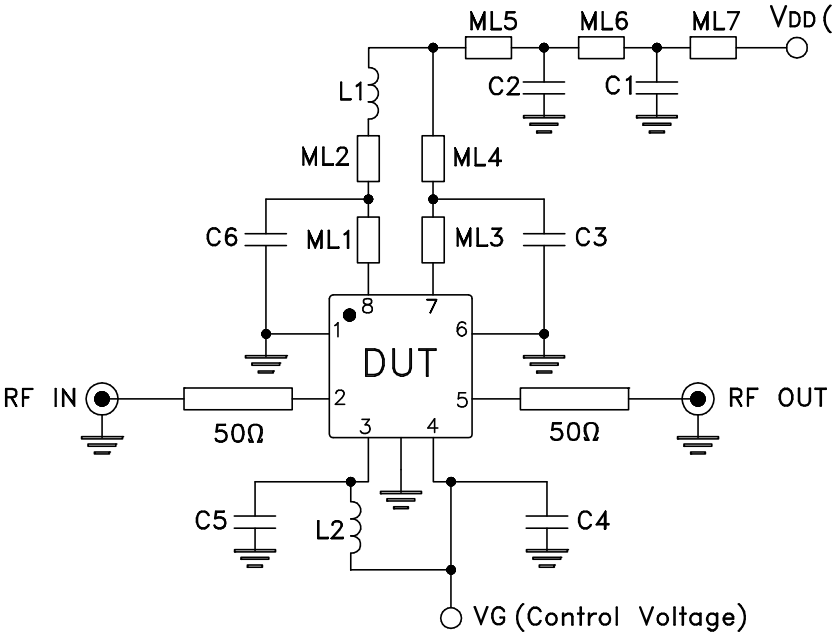

COMPONENT	TYPE AND VALUE	SIZE
DUT	Mini-Circuits TSS-183A+	3X3 mm
L1,L2	Inductor 3.3 nH	0805
C1	Capacitor 5.6 pF	0402
C2	Capacitor 18 pF	
C3,C4,C5	Capacitor .001 uF	
C6	Capacitor .1 uF	

ML1-ML7 are short microstrip lines

Schematic Diagram

Notes:

1. 50 Ohm SMA Female connectors.
2. PCB Material: RO4350 or equivalent, Dielectric Constant=3.5, Thickness=.010 inch.

Mini-Circuits®

Mini-Circuits

Environmental Specifications ENV08T1

All Mini-Circuits products are manufactured under exacting quality assurance and control standards, and are capable of meeting published specifications after being subjected to any or all of the following physical and environmental test.

Specification	Test/Inspection Condition	Reference/Spec
Operating Temperature	-40° to 85°C or -45° to 85°C Ambient Environment	Individual Model Data Sheet
Storage Temperature	-55° to 100° C or -65° to 150° Ambient Environment	Individual Model Data Sheet
Thermal Shock	-55° to 100°C, 100 cycles	MIL-STD-202, Method 107, Condition A-3, except +100°C
Mechanical Shock	1.5Kg, 0.5 ms, 5 shock pulses, Y1 direction only	MIL-STD-883, Method 2002, Condition B, except Y1 direction only
Vibration (Variable Frequency)	50g peak	MIL-STD-883, Method 2007, Condition B
Autoclave	15 psig, 100% RH, 121°C, 96 hours	JESD22-A102, Condition C
HAST	130°C, 85% RH, 96 hours	JESD22-A110
Solderability	10X Magnification	J-STD-002, Para 4.2.5, Test S, 95% Coverage
Solder Reflow Heat	Sn-Pb Eutetic Process: 240°C peak Pb-Free Process: 260°C peak	J-STD-020, Table 4-1, 4-2 and 5-2; Figure 5-1
Moisture Sensitivity: Level 1	Bake at 125°C for 24 hours Soak at 85°C/85% RH for 168 hours, Reflow 3 cycles at 260°C peak	J-STD-020
Marking Resistance to Solvents	Isopropyl alcohol + mineral spirits at 25°C; terpene defluxer at 25°C; distilled water + proylene glycol monomethyl ether +	MIL-STD-202, Method 215

This document and its contents are the property of Mini-Circuits.

All Mini-Circuits products are manufactured under exacting quality assurance and control standards, and are capable of meeting published specifications after being subjected to any or all of the following physical and environmental test.

Specification	Test/Inspection Condition	Reference/Spec
	monoethanolamine at 63°C to 70°C	

This document and its contents are the property of Mini-Circuits.