Absorptive

SPDT RF Switch ZASWA2-50DR-FA+

50Ω DC[2] - 5000 MHz

The Big Deal

- Wide bandwidth DC[2] to 5000 MHz
- High Isolation, 70 dB typ.
- Very fast switching, 20ns typ.
- Low video break thru 45 mVp-p typ.

CASE STYLE: CY1481

Product Overview

The ZASWA2-50DR-FA+ is an excellent high isolation, solid state SPDT, absorptive RF switch. With its broad frequency range, fast switching time and excellent RF performance, the ZASWA2-50DR-FA+ is an excellent replacement for the Mini-Circuits' legacy switch model ZASWA2-50DR-FT+. Refer app note AN-80-022 for more details. The wide bandwidth, high isolation and fast switching characteristics makes this switch a versatile choice for several RF applications & systems.

Key Features

Feature	Advantages
Integrated TTL Driver	-Operates at +5V to -5V -Low control current allows compatibility with a variety of driver circuits -Fast 20 ns typ.Switching time
Excellent for a Variety of Applications From Bench to Integrated Systems	-High speed testers -Automated switching networks -Wireless Infrastructure -Military
Excellent RF Performance	-Wide bandwidth: DC[2] to 5000 MHz -Good Insertion Loss: 2.5 dB Typ -Low video leakage, 45 mVp-p typ.

2. All RF connections must be blocked or held at 0V DC. Low frequency is determined by value of Coupling capacitors at RF ports.

Absorptive

SPDT RF Switch

50Ω DC[2]-5000 MHz

Absorptive RF Switch with Internal Driver
Dual Supply Voltage, +5V & -5V

Generic photo used for illustration purposes only

ZASWA2-50DR-FA+

CASE STYLE: CY1481

Connectors	Model
SMA	ZASWA2-50DR-FA+

+RoHS Compliant
The +Suffix identifies RoHS Compliance. See our web site for RoHS Compliance methodologies and qualifications

Product Features
- Wide bandwidth, DC[2] to 5000 MHz
- Good Insertion loss, 2.5 dB typ.
- Internal TTL driver
- Fast switching, Rise/fall time, 4 ns typ.
- Wide operating temperature, -20°C to +85°C

Typical Applications
- Cellular
- ISM, WCDMA, WIMAX
- PCN
- Automated switching networks
- Military

General Description
The ZASWA2-50DR-FA+ is a 50Ω absorptive, high isolation, SPDT RF switch. It is designed for RF/wireless applications covering a broad frequency range from DC[2] to 5000 MHz with good insertion loss and Isolation. The ZASWA2-50DR-FA+ operates with a dual supply voltage ±5V. This unit includes an internal driver circuitry which makes it easier to control switching with standard voltage levels.

Schematic and Application Circuit

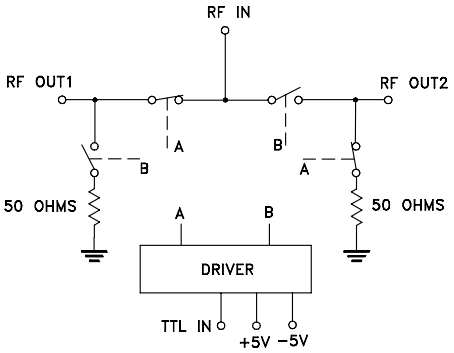

2. All RF connections must be blocked or held at 0V DC. Low frequency is determined by value of Coupling capacitors at RF ports.

RF Electrical Specifications, DC[2] - 5000 MHz, T_{AMB}=25°C, Supply Voltage (+V, -V) =+5V, -5V

Parameter	Condition (MHz)	Min.	Typ.	Max.	Units
Frequency Range		DC[2]		5000	MHz
Insertion Loss	DC[2]-100	—	1.3	2.0	dB
	100-1000	—	1.7	2.5	
	1000-2000	—	1.8	3.0	
	2000-5000	—	3.0	4.5	
Isolation between Common port and RF1/RF2 Ports	DC[2]-100	68	90	—	dB
	100-1000	75	90	—	
	1000-2000	65	82	—	
	2000-5000	40	65	—	
Return Loss (IN PORT)	DC[2]-5000	—	14	—	dB
Return Loss @ RF1/RF2 ports (ON STATE)	DC[2]-5000	—	14.5	—	dB
Return Loss @ RF1/RF2 ports (OFF STATE)	DC[2]-5000	—	16.5	—	dB
Input 1dB Compression (1)	DC2-100	—	—	—	dBm
	100-1000	—	>20	—	
	1000-2000	—	>24	—	
	2000-5000	—	>23	—	
DC Electrical Specifications					
Supply Voltage (+V)		—	5	—	V
Supply Voltage (-V)		—	-5	—	V
Positive Supply Current	+V=5V	—	4.6	—	mA
Negative Supply Current	-V=-5V	—	-8.2	—	mA
Control Voltage Low		0	—	0.7	V
Control Voltage High		2.1	—	5	V
Control Current		—	—	2	mA
Switching Specifications					
Rise/Fall Time (10 to 90% or 90 to 10% RF)	+V=5V, -V=-5V	—	5	—	nSec
Switching Time (50% CTRL to 90/10% RF)	+V=5V, -V=-5V	—	20	—	nSec
Video Feed through (Control 0-5V, Frequency 1 MHz)	+V=5V, -V=-5V	—	45	—	mV_{P-P}

1. At low frequency(<100 MHz), the dynamic range of switch decreases.

Absolute Maximum Ratings

Parameter	Ratings
Operating Temperature	-20°C to 85°C
Storage Temperature	-55°C to 100°C
Supply Voltage ($+V_{DD}$ & $-V_{DD}$)	+5.5V, -5.5V
Voltage Control	-0.2V min, +5.5V max
RF input power[3]	31 dBm
ESD, HBM	Class 1A (250 to <500V) per JESD22-A114

2. All RF connections must be blocked or held at 0V DC. Low frequency is determined by value of Coupling capacitors at RF ports.
3 Frequency range of 500-5000 MHz.

Truth Table *(State of control voltage selects the desired switch state)*

State of Control Voltage	Switch State - RF IN to	
	RF1	RF2
Low	ON	OFF
High	OFF	ON
ON- low insertion loss state OFF- Isolation State		

Coaxial Configuration

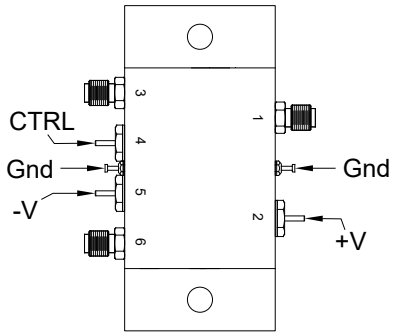

Coaxial Connections

Function	Port Number	Description
RF IN	1	RF Common/ SUM Port
RF1	3	RF Out #1/In Port #1
RF2	6	RF Out #2/In Port #2
Control	4	TTL Control IN
+5V	2	Positive Supply Voltage
-5V	5	Negative Supply Voltage
Gnd	Gnd	Ground

Outline Drawing (CY1481)

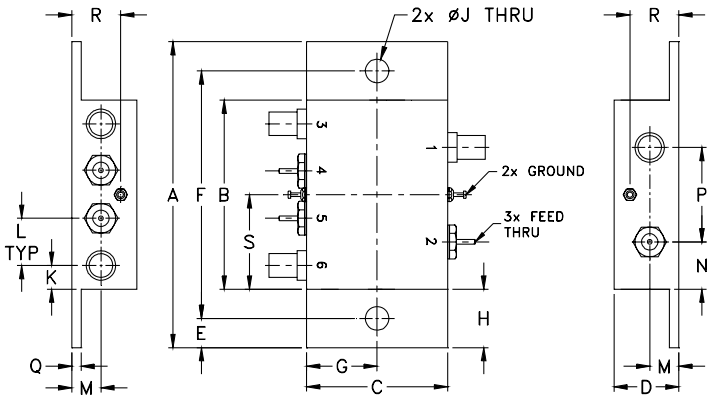

Outline Dimensions (inch / mm)

A	B	C	D	E	F	G	H	J
3.24	2.00	1.50	.69	.31	2.620	.75	.62	.250
82.30	50.80	38.10	17.53	7.87	66.55	19.05	15.75	6.35

K	L	M	N	P	Q	R	S	wt
.25	.50	.31	.50	1.00	.10	.52	1.00	grams
6.35	12.70	7.87	12.70	25.40	2.54	13.21	25.40	80.0

Additional Detailed Technical Information

Additional information is available on our web site. To access this information enter the model number on our web site home page.	
Performance Data	Data Table
	Swept Graphs
	S-Parameter (S2P Files) Data Set (.zip file)
Case Style	**CY1481**
Environmental Ratings	**ENV28T16**

Notes
A. Performance and quality attributes and conditions not expressly stated in this specification document are intended to be excluded and do not form a part of this specification document.
B. Electrical specifications and performance data contained in this specification document are based on Mini-Circuit's applicable established test performance criteria and measurement instructions.
C. The parts covered by this specification document are subject to Mini-Circuits standard limited warranty and terms and conditions (collectively, "Standard Terms"); Purchasers of this part are entitled to the rights and benefits contained therein. For a full statement of the Standard Terms and the exclusive rights and remedies thereunder, please visit Mini-Circuits' website at www.minicircuits.com/MCLStore/terms.jsp

RF Absorptive Switch SPDT ZASWA2-50DR-FA+

Typical Performance Data

RF (MHz)	INSERTION LOSS (dB)		ISOLATION (dB)		ISOLATION (dB)		RETURN LOSS (dB)					
	RF IN-RF1 (ON1)	RF IN-RF2 (ON2)	RF IN-RF1 (ON2)	RF IN-RF2 (ON1)	RF1-RF2 (ON1)	RF1-RF2 (ON2)	RF IN (ON1)	RF IN (ON2)	RF1 (ON1)	RF2 (ON2)	RF1 (OFF1)	RF2 (OFF2)
0.3	1.09	1.09	74.71	74.93	74.94	72.79	26.07	25.93	24.81	24.77	29.00	28.54
1	1.10	1.10	80.13	80.42	80.69	78.49	25.99	25.93	24.65	24.60	29.04	28.57
5	1.10	1.10	89.47	91.52	90.00	90.33	26.52	26.41	25.10	25.11	29.12	28.67
10	1.11	1.11	94.51	94.76	95.09	95.24	27.07	27.00	25.61	25.59	29.17	28.71
50	1.17	1.17	110.89	111.29	111.22	114.85	28.52	28.44	27.28	27.25	30.02	29.47
100	1.21	1.21	101.30	104.07	106.67	106.63	27.80	27.76	27.56	27.57	30.35	29.82
200	1.26	1.26	96.28	94.99	95.33	94.37	25.12	25.00	27.29	27.13	30.44	29.81
300	1.30	1.30	94.43	93.02	91.98	92.79	22.60	22.56	26.67	26.47	30.48	29.79
400	1.33	1.34	95.22	93.33	91.95	92.22	20.62	20.59	25.79	25.61	30.64	29.83
500	1.36	1.37	100.37	95.52	92.76	94.15	19.10	19.12	24.93	24.83	30.86	29.96
600	1.40	1.40	116.23	98.03	94.78	95.21	17.90	17.97	24.03	24.07	31.11	30.02
700	1.43	1.44	111.39	104.08	100.40	96.16	16.98	17.10	23.14	23.31	31.34	30.07
800	1.47	1.47	107.85	103.64	99.81	97.92	16.34	16.49	22.49	22.74	31.58	30.16
900	1.50	1.50	107.07	100.74	98.16	95.61	15.94	16.10	21.92	22.33	31.88	30.25
1000	1.53	1.53	104.82	99.45	96.92	95.19	15.76	15.97	21.65	22.20	32.16	30.19
1200	1.57	1.57	98.29	96.35	95.71	92.72	16.14	16.32	21.79	22.44	32.34	30.15
1400	1.60	1.59	93.86	93.00	92.22	90.73	17.67	17.71	23.14	23.88	31.84	29.82
1600	1.61	1.61	92.02	90.96	90.96	89.14	20.78	20.42	25.99	26.88	30.59	29.16
1800	1.63	1.63	88.42	88.25	89.14	88.75	25.04	24.01	29.05	31.20	29.13	28.27
2000	1.67	1.67	85.73	86.03	86.87	87.47	23.07	23.45	26.13	28.68	27.67	27.56
2200	1.73	1.73	84.76	83.85	85.37	85.16	18.37	19.27	22.24	24.02	26.33	26.81
2400	1.81	1.79	83.80	83.01	81.62	83.86	15.29	16.05	19.73	20.99	25.25	26.19
2600	1.89	1.87	82.93	83.56	79.62	81.70	13.30	13.84	18.10	18.97	24.44	25.70
2800	1.98	1.97	81.84	81.92	78.67	79.15	11.98	12.35	16.89	17.47	23.98	25.69
3000	2.09	2.07	80.68	79.13	76.24	76.71	11.10	11.34	15.82	16.18	23.80	26.01
3200	2.20	2.18	79.25	76.97	73.78	73.85	10.54	10.75	14.76	15.02	23.99	26.64
3400	2.33	2.29	77.76	73.88	70.98	70.78	10.27	10.53	13.68	14.00	24.45	27.28
3600	2.46	2.41	75.69	70.67	67.65	67.64	10.26	10.63	12.75	13.21	24.97	27.36
3800	2.59	2.51	71.58	67.52	64.22	64.87	10.53	11.11	12.12	12.77	24.84	25.86
4000	2.68	2.57	66.74	64.34	60.76	61.80	11.20	12.12	11.98	12.89	23.35	23.27
4200	2.71	2.59	61.89	60.86	57.01	58.37	12.54	14.05	12.59	14.00	20.91	20.43
4400	2.69	2.60	58.39	57.83	54.19	55.32	15.04	17.68	14.44	16.70	18.25	17.69
4600	2.69	2.61	56.90	53.25	51.19	50.40	20.04	27.21	18.57	22.27	15.80	15.35
4800	2.80	2.76	51.48	49.09	48.15	48.33	33.95	26.26	27.55	24.22	13.62	13.43
5000	3.03	3.04	47.54	45.07	44.58	46.00	25.47	18.62	23.24	17.82	11.78	11.74
5200	3.44	3.40	42.84	40.23	40.97	42.67	22.99	17.34	18.03	14.88	10.17	10.24
5400	4.08	3.85	37.83	35.48	37.04	38.96	31.09	21.97	15.96	14.00	8.84	8.98
5600	5.16	4.55	33.79	31.42	33.30	35.43	16.72	23.54	14.39	13.29	7.75	7.95
5800	6.53	5.79	31.11	28.85	30.66	32.69	10.19	11.39	13.60	11.66	6.95	7.13
6000	7.66	7.45	30.28	28.48	29.94	31.47	6.74	6.65	13.14	10.29	6.46	6.63

Typical Performance Curves

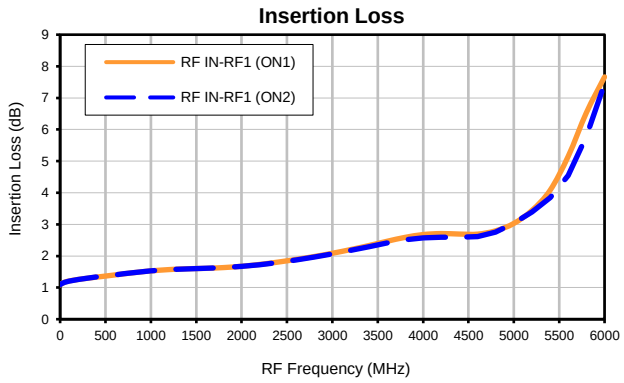

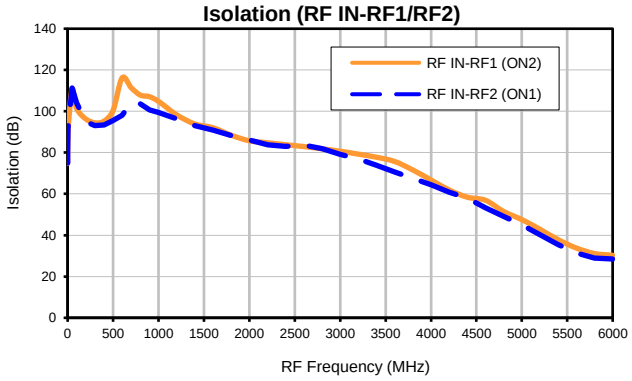

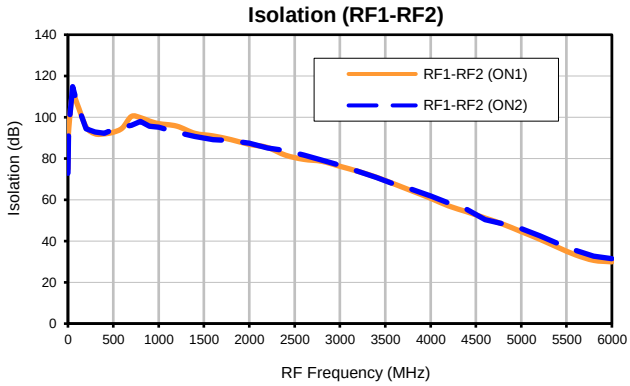

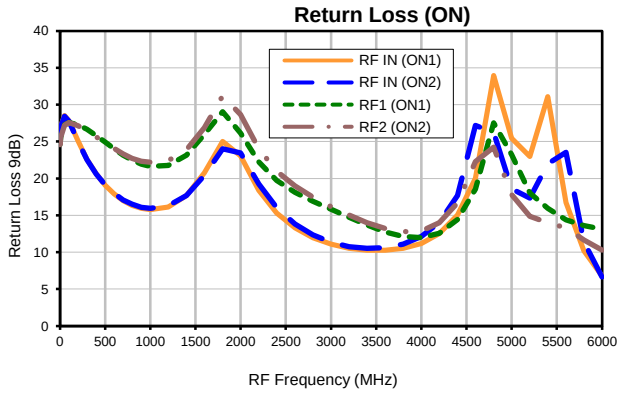

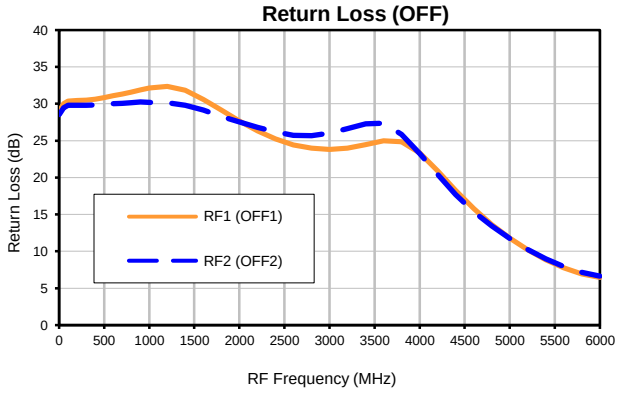

Case Style CY

CY1481

Outline Dimensions

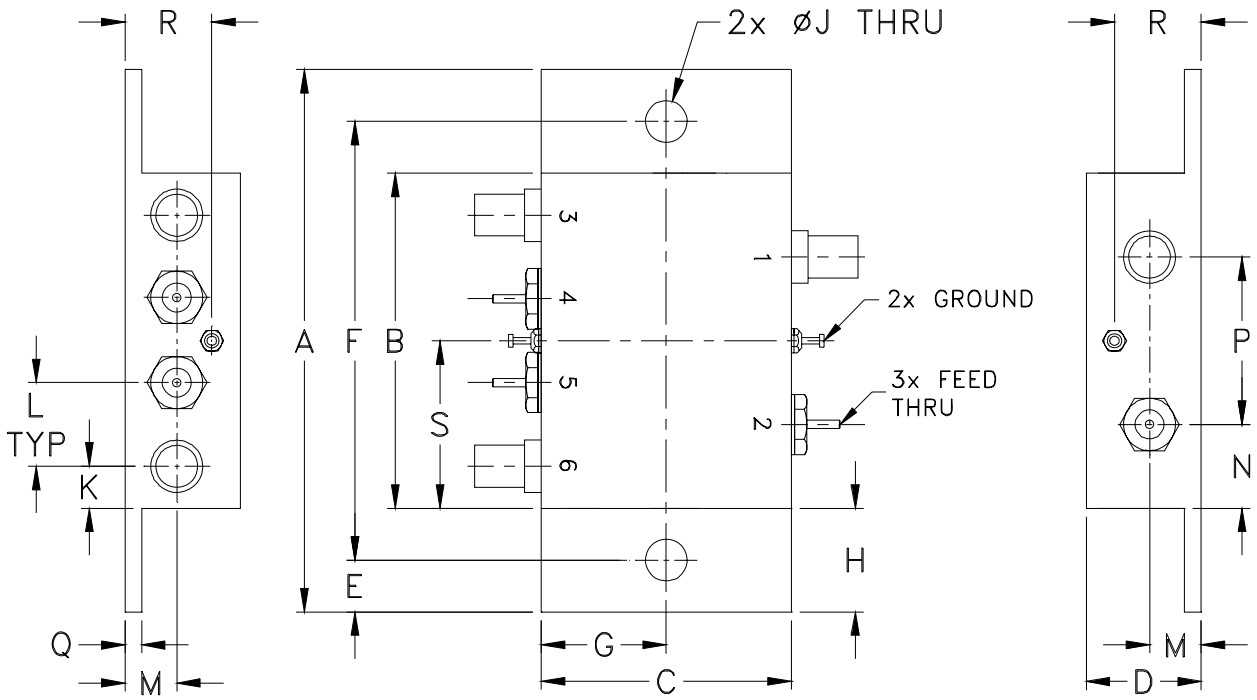

CASE#	A	B	C	D	E	F	G	H	J	K	L	M	N
CY1481	3.24 (82.30)	2.00 (50.80)	1.50 (38.10)	.69 (17.53)	.31 (7.87)	2.620 (66.55)	.75 (19.05)	.62 (15.75)	.250 (6.35)	.25 (6.35)	.50 (12.70)	.31 (7.87)	.50 (12.70)

CASE#	P	Q	R	S	WT. GRAMS
CY1481	1.00 (25.40)	.10 (2.54)	.52 (13.21)	1.00 (25.40)	80.0

Dimensions are in inches (mm). Tolerances: 2 Pl. ± .03; 3 Pl. ± .015

Notes:

1. Case material: Aluminum alloy.
2. Case finish and mounting bracket finish:
   For RoHS Case Styles: Clear chemical conversion coating, non-chrome or trivalent chrome based.

Mini-Circuits®
INTERNET http://www.minicircuits.com
P.O. Box 350166, Brooklyn, New York 11235-0003 (718) 934-4500 Fax (718) 332-4661
Distribution Centers NORTH AMERICA 800-654-7949 • 417-335-5935 • Fax 417-335-5945 • EUROPE 44-1252-832600 • Fax 44-1252-837010
Mini-Circuits ISO 9001 & ISO 14001 Certified

Mini-Circuits

Environmental Specifications ENV28T16

All Mini-Circuits products are manufactured under exacting quality assurance and control standards, and are capable of meeting published specifications after being subjected to any or all of the following physical and environmental test.

Specification	Test/Inspection Condition	Reference/Spec
Operating Temperature	-20° to 85°C Ambient Environment	Individual Model Data Sheet
Storage Temperature	-55° to 100° C Ambient Environment	Individual Model Data Sheet
Barometric Pressure	100,000 Feet	MIL-STD-202, Method 105, Condition D
Humidity	90% RH, 65°C Units may require bake-out after humidity to restore full performance.	MIL-STD-202, Method 103
Vibration (High Frequency)	20g peak, 10-2000 Hz, 12 times in each of three perpendicular directions (total 36)	MIL-STD-202, Method 204, Condition D
Mechanical Shock	100g, 6ms sawtooth, 3 shocks each direction 3 axes (total 18)	MIL-STD-202, Method 213, Condition I