NON-CATALOG

Coaxial

Amplifier

ZFL-1HAD+

50Ω High Isolation 10 to 500 MHz

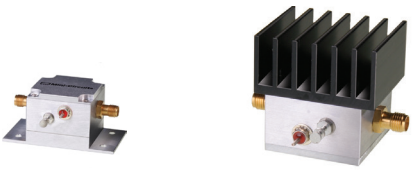

ZFL-1HADX+ ZFL-1HAD+

CASE STYLE: SS98

Connectors	Model
SMA	ZFL-1HAD+
BRACKET (OPTION "B")	ZFL-1HADB+
SMA	ZFL-1HADX+

Features

- wideband, 10 to 500 MHz
- active directivity (isolation-gain), 30 dB typ.

Applications

- VHF/UHF
- laboratory use
- receivers
- two-tone, 3rd order IM testing

+RoHS Compliant

The +Suffix identifies RoHS Compliance. See our web site for RoHS Compliance methodologies and qualifications

Amplifier Electrical Specifications

MODEL NO.	FREQUENCY (MHz)		GAIN (dB)		MAXIMUM POWER (dBm)			DYNAMIC RANGE		VSWR (:1) Typ.		ACTIVE DIRECTIVITY[1] (dB)				DC POWER	
				Flatness Max.	Output (1 dB Compr.)			NF[3] (dB)	IP3 (dBm)			L		U		Volt (V)	Current (mA)
	f_L	f_U	Min.	Total Range	L	U	Input (no damage)	Typ.	Typ.	In[2]	Out	Typ.	Min.	Typ.	Min.	Nom.	Max.
ZFL-1HAD+	10	500	10	±1.0	+20	+20	+17	7.5	+30	1.3	1.35	30	20	25	18	15	115
ZFL-1HADX+*	10	500	10	±1.0	+20	+20	+17	7.5	+30	1.3	1.35	30	20	25	18	15	115

* Heat sink not included

L= low range (f_L to $f_U/2$) U= upper range ($f_U/2$ to f_U)

[1]Active Directivity(dB)= Isolation (dB)- Gain (dB)

[2] Input VSWR in 10-20 MHz band increases to 1.45:1 at -20ºC.

[3] Below 50 MHz, NF increases to 14dB typ. at 10 MHz

Open load is not recommended, potentially can cause damage.
With no load derate max input power by 20 dB

To order without heat sink, add suffix X to model number. Alternative heat sinking and heat removal must be provided by the user to limit maximum temperature to 71°C, in order to ensure proper performance. For reference, this requires thermal resistance of user's external heat sink to be 15°C/W Max.

Maximum Ratings

Operating Temperature	-20°C to 71°C
Storage Temperature	-55°C to 100°C
DC Voltage	+17V Max.

Permanent damage may occur if any of these limits are exceeded.

Outline Drawing

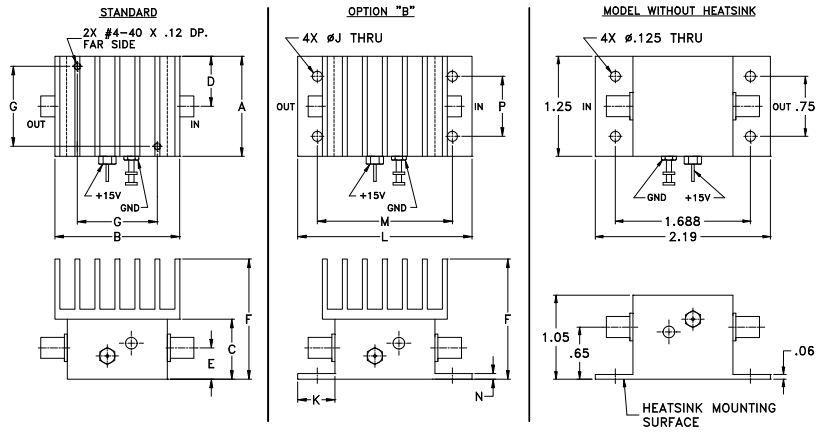

Outline Dimensions (inch / mm)

A	B	C	D	E	F	G	H	J	K	L	M	N	P	wt*
1.25	1.56	.75	.63	.39	1.50	1.000	--	.125	.46	2.19	1.688	.06	.750	grams
31.75	39.62	19.05	16.00	9.91	38.10	25.40	--	3.18	11.68	55.63	42.88	1.52	19.05	85.0

*70 grams without heat sink

Notes

A. Performance and quality attributes and conditions not expressly stated in this specification document are intended to be excluded and do not form a part of this specification document.

B. Electrical specifications and performance data contained in this specification document are based on Mini-Circuit's applicable established test performance criteria and measurement instructions.

C. The parts covered by this specification document are subject to Mini-Circuits standard limited warranty and terms and conditions (collectively, "Standard Terms"); Purchasers of this part are entitled to the rights and benefits contained therein. For a full statement of the Standard Terms and the exclusive rights and remedies thereunder, please visit Mini-Circuits' website at www.minicircuits.com/MCLStore/terms.jsp

Mini-Circuits®

www.minicircuits.com P.O. Box 350166, Brooklyn, NY 11235-0003 (718) 934-4500 sales@minicircuits.com

Typical Performance Data/Curves

ZFL-1HAD+

FREQUENCY (MHz)	GAIN (dB)			DIRECTIVITY (dB)			VSWR (:1)		NOISE FIGURE (dB)	P. OUT at 1dB COMPR. (dBm)
	12V	15V	16V	12V	15V	16V	IN	OUT	15V	15V
10.00	11.38	11.58	11.55	39.00	41.52	39.56	1.06	1.28	14.00	22.16
20.00	11.37	11.58	11.56	47.23	48.57	49.60	1.07	1.24	10.75	22.15
50.00	11.40	11.61	11.59	45.11	42.25	49.14	1.07	1.24	7.99	22.18
100.00	11.40	11.61	11.59	39.74	43.08	42.08	1.08	1.26	7.22	22.10
200.00	11.10	11.28	11.19	35.62	36.96	37.72	1.11	1.17	6.95	21.77
250.00	11.28	11.45	11.41	33.50	34.84	35.67	1.12	1.20	6.86	21.90
300.00	11.39	11.58	11.55	31.82	33.08	33.85	1.14	1.23	7.04	21.86
350.00	11.49	11.68	11.66	30.11	31.39	32.36	1.17	1.26	6.72	21.89
450.00	11.64	11.83	11.82	27.72	29.14	29.53	1.22	1.30	6.55	21.87
500.00	11.70	11.90	11.88	26.66	28.01	28.66	1.25	1.32	6.50	21.83

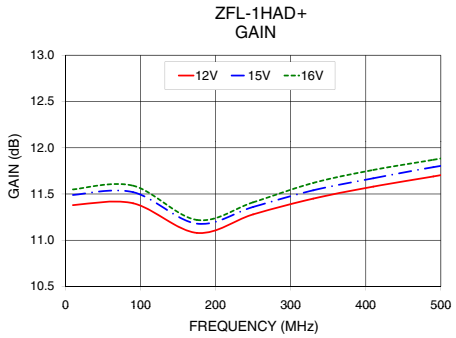

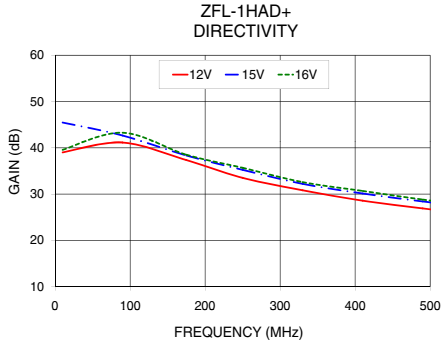

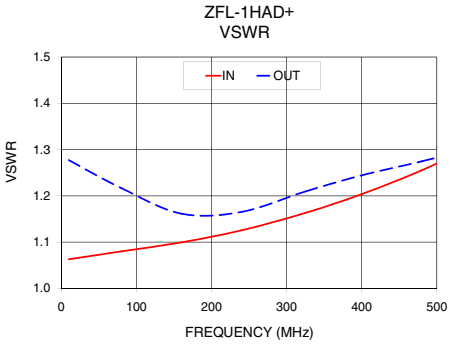

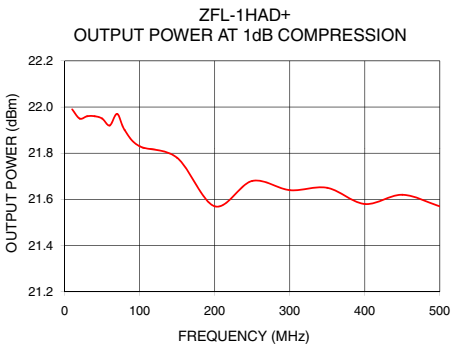

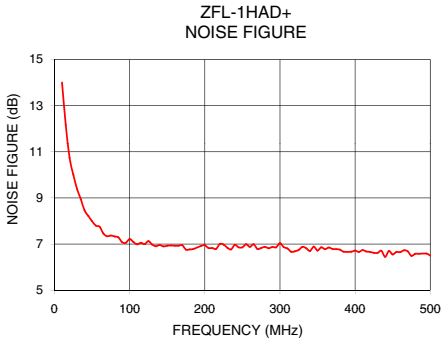

Notes

A. Performance and quality attributes and conditions not expressly stated in this specification document are intended to be excluded and do not form a part of this specification document.

B. Electrical specifications and performance data contained in this specification document are based on Mini-Circuit's applicable established test performance criteria and measurement instructions.

C. The parts covered by this specification document are subject to Mini-Circuits standard limited warranty and terms and conditions (collectively, "Standard Terms"); Purchasers of this part are entitled to the rights and benefits contained therein. For a full statement of the Standard Terms and the exclusive rights and remedies thereunder, please visit Mini-Circuits' website at www.minicircuits.com/MCLStore/terms.jsp

Typical Performance Data

FREQUENCY (MHz)	GAIN (dB)			DIRECTIVITY (dB)			VSWR IN (:1)	VSWR OUT (:1)	NOISE FIGURE (dB)	Pout at 1dB Comp. (dBm)
	12V	15V	16V	12V	15V	16V	15V	15V	15V	15V
10.0	11.38	11.58	11.55	39.00	41.52	39.56	1.06	1.28	9.25	22.16
20.0	11.37	11.58	11.56	47.23	48.57	49.60	1.07	1.24	7.80	22.15
50.0	11.40	11.61	11.59	45.11	42.25	49.14	1.07	1.24	6.88	22.18
100.0	11.40	11.61	11.59	39.74	43.08	42.08	1.08	1.26	7.09	22.10
200.0	11.10	11.28	11.19	35.62	36.96	37.72	1.11	1.17	6.96	21.77
250.0	11.28	11.45	11.41	33.50	34.84	35.67	1.12	1.20	6.61	21.90
300.0	11.39	11.58	11.55	31.82	33.08	33.85	1.14	1.23	6.87	21.86
350.0	11.49	11.68	11.66	30.11	31.39	32.36	1.17	1.26	6.46	21.89
450.0	11.64	11.83	11.82	27.72	29.14	29.53	1.22	1.30	6.32	21.87
500.0	11.70	11.90	11.88	26.66	28.01	28.66	1.25	1.32	6.59	21.83

Mini-Circuits®
IF/RF MICROWAVE COMPONENTS • ISO 9001 ISO 14001 AS 9100 CERTIFIED RoHS compliant
P.O. Box 350166, Brooklyn, New York 11235-0003 (718) 934-4500 Fax (718) 332-4661
YONI2 Patent Pending The Design Engineers Search Engine finds the model you need, Instantly • For detailed performance specs & shopping online see minicircuits.com

Typical Performance Curves

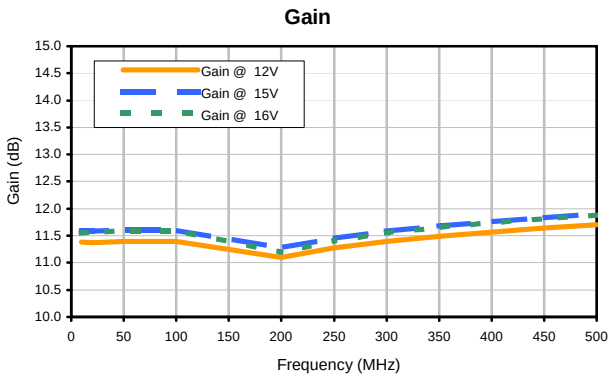

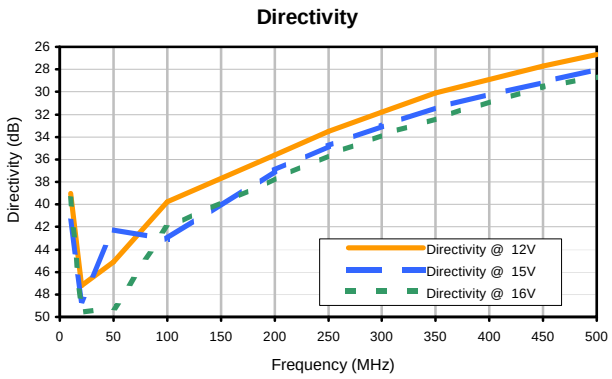

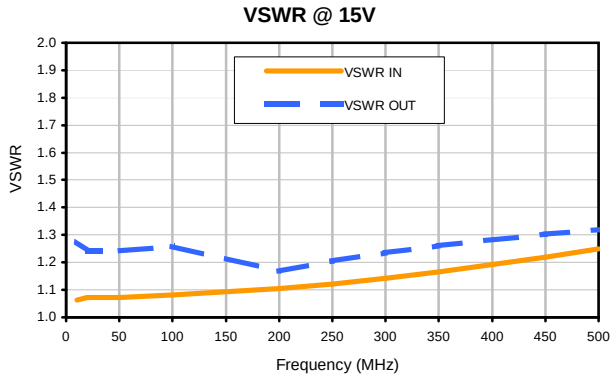

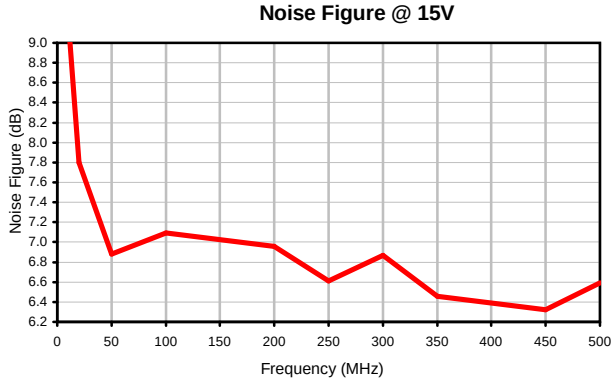

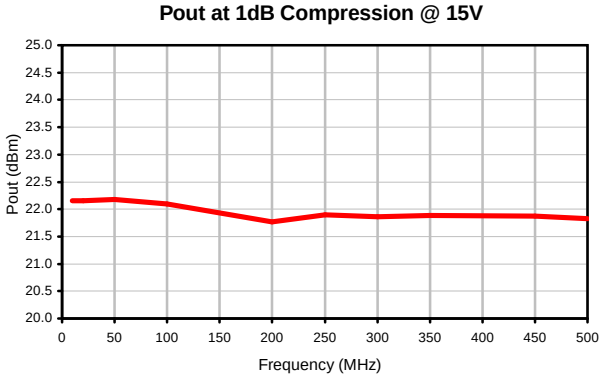

Mini-Circuits®
IF/RF MICROWAVE COMPONENTS • ISO 9001 ISO 14001 AS 9100 CERTIFIED RoHS compliant
P.O. Box 350166, Brooklyn, New York 11235-0003 (718) 934-4500 Fax (718) 332-4661
The Design Engineers Search Engine finds the model you need, Instantly • For detailed performance specs & shopping online see minicircuits.com

Case Style SS

SS98

Outline Dimensions

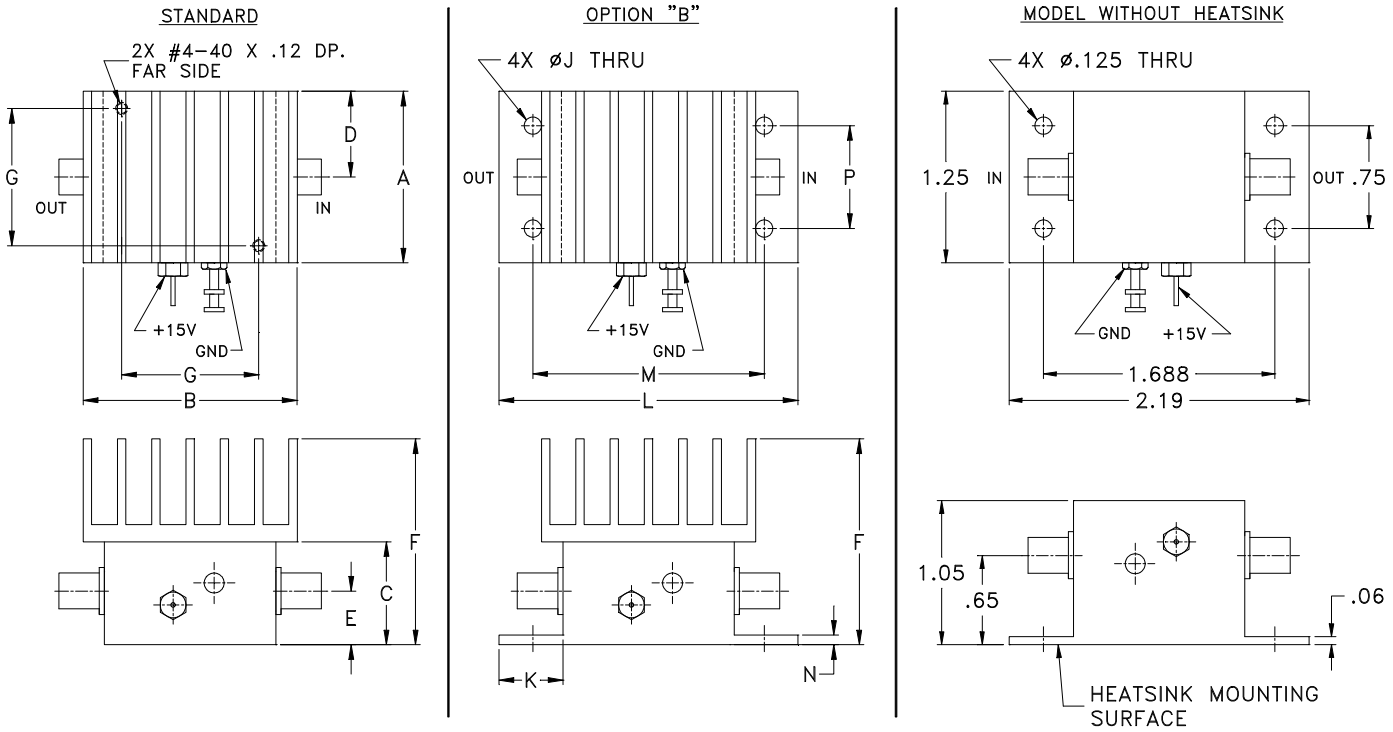

CASE#	A	B	C	D	E	F	G	H	J	K	L	M	N
SS98	1.25 (31.75)	1.56 (39.62)	.75 (19.05)	.63 (16.00)	.39 (9.91)	1.50 (38.10)	1.000 (25.40)	-- --	.125 (3.18)	.46 (11.68)	2.19 (55.63)	1.688 (42.88)	.06 (1.52)

CASE#	P	WT. GRAMS	WT. WITHOUT HEATSINK GRAMS
SS98	.750 (19.05)	85.0	70.0

Dimensions are in inches (mm). Tolerances: 2 Pl. ± .03; 3 Pl. ± .015

Notes:

1. Case material: Aluminum alloy.
2. Case finish:
   For RoHS Case Styles: Clear chemical conversion coating, non-chrome or trivalent chrome based.
3. Heat sink finish: Black anodize.
4. Refer to the individual model data sheet for the type of connector available.

Mini-Circuits®
INTERNET http://www.minicircuits.com
P.O. Box 350166, Brooklyn, New York 11235-0003 (718) 934-4500 Fax (718) 332-4661
Distribution Centers NORTH AMERICA 800-654-7949 • 417-335-5935 • Fax 417-335-5945 • EUROPE 44-1252-832600 • Fax 44-1252-837010
Mini-Circuits ISO 9001 & ISO 14001 Certified

This document and its contents are the property of Mini-Circuits

Mini-Circuits

Environmental Specifications ENV23T2

All Mini-Circuits products are manufactured under exacting quality assurance and control standards, and are capable of meeting published specifications after being subjected to any or all of the following physical and environmental test.

Specification	Test/Inspection Condition	Reference/Spec
Operating Temperature	-20° to 71° C Ambient Environment	Individual Model Data Sheet
Storage Temperature	-55° to 100° C Ambient Environment	Individual Model Data Sheet
Stabilization Bake	(non-operating) 125°C, 24 hours	- - -
Burn-in at Elevated Temp.	(DC on) 160 hours at 85° C	MIL-STD-202, Method 108
Thermal Shock	-55° to 100°C, 5 cycles	MIL-STD-202, Method 107, Condition A, except 100°C

This document and its contents are the property of Mini-Circuits.