Coaxial

High Pass Filter

ZHFW-K9500+

50Ω 10500 to 20000 MHz

Generic photo used for illustration purposes only

CASE STYLE: UK3042

The Big Deal

- Good power handling, 2.5W
- Temperature stable
- Broadband connectorized package
- Good rejection, 43 dB typical

Product Overview

ZHFW-K9500+ is a 50Ω high pass filter built in broadband connectorized package. Covering 10500-20000 MHz bandwidth, these units offer good matching within the passband and good rejection in stopband. ZHFW-K9500+ offer low insertion loss, and good power handling capability. It handles up to 2.5W RF input power and provides a wide operating temperature range from -55°C to 125°C.

Key Features

Feature	Advantages
Low passband insertion loss	Suitable for high performance application.
2.5W Power handling	Supports a range of system power requirements.
Connectorized package	The connectorized package is easy to interface with other devices and well suited for test setups.

Notes
A. Performance and quality attributes and conditions not expressly stated in this specification document are intended to be excluded and do not form a part of this specification document.
B. Electrical specifications and performance data contained in this specification document are based on Mini-Circuit's applicable established test performance criteria and measurement instructions.
C. The parts covered by this specification document are subject to Mini-Circuits standard limited warranty and terms and conditions (collectively, "Standard Terms"); Purchasers of this part are entitled to the rights and benefits contained therein. For a full statement of the Standard Terms and the exclusive rights and remedies thereunder, please visit Mini-Circuits' website at www.minicircuits.com/MCLStore/terms.jsp

Mini-Circuits®
www.minicircuits.com P.O. Box 350166, Brooklyn, NY 11235-0003 (718) 934-4500 sales@minicircuits.com

Coaxial

High Pass Filter

50Ω 10500 to 20000 MHz

ZHFW-K9500+

Generic photo used for illustration purposes only

CASE STYLE: UK3042

Connectors	Model
2.92mm-F	ZHFW-K9500+

+RoHS Compliant

The +Suffix identifies RoHS Compliance. See our web site for RoHS Compliance methodologies and qualifications

Features

- Very good rejection, 43dB typ.
- Temperature stable

Applications

- Test and measurements
- Military applications
- Telecommunications and broadband wireless systems

Functional Schematic

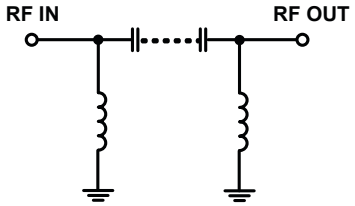

Typical Frequency Response

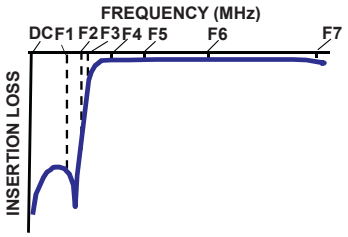

Electrical Specifications at 25°C

Parameter		F#	Frequency (MHz)	Min.	Typ.	Max.	Unit
Stop Band	Rejection Loss	DC-F1	DC - 6000	35	43	-	dB
		F1-F2	6000 - 7800	23	36	-	dB
	Freq. Cut-Off	F3*	9650	-	3.0	-	dB
Pass Band	Insertion Loss	F4-F5	10500 - 12000	-	2.2	-	dB
		F5-F6	12000 - 17500	-	1.6	2.3	dB
		F6-F7	17500 - 20000	-	2.0	-	dB
	Return Loss	F4-F5	10500 - 12000	-	11	-	dB
		F5-F6	12000 - 17500	-	13	-	dB
		F6-F7	17500 - 20000	-	12	-	dB

In Applications where DC voltage is present at either input or output ports, DC blocks are required.
* Typically, a ±5% frequency deviation from the stated value may occur on a unit-to-unit basis.

Maximum Ratings	
Operating Temperature	-55°C to 125°C
Storage Temperature	-55°C to 125°C
RF Power Input*	2.5W max.@25°C

*Passband rating, derate linearly to 0.6W at 125°C ambient
Permanent damage may occur if any of these limits are exceeded.

Typical Performance Data at 25°C

Frequency (MHz)	Insertion Loss (dB)	Return Loss (dB)
10	77.08	0.12
500	58.11	0.43
1000	52.51	0.53
2000	47.14	0.50
3000	44.56	0.39
4000	43.65	0.37
6000	48.75	0.83
7800	38.19	1.31
8250	30.31	1.41
8800	20.21	1.68
9300	10.09	3.14
9650	4.38	9.12
10500	2.36	11.96
12000	1.52	28.15
13000	1.38	26.23
14000	1.33	21.70
15000	1.37	16.69
16000	1.38	16.42
17500	1.42	17.70
20000	1.46	20.51

ZHFW-K9500+
INSERTION LOSS (zoomed)

ZHFW-K9500+
INSERTION LOSS

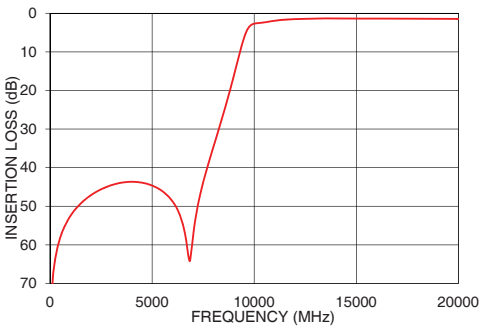

ZHFW-K9500+
RETURN LOSS

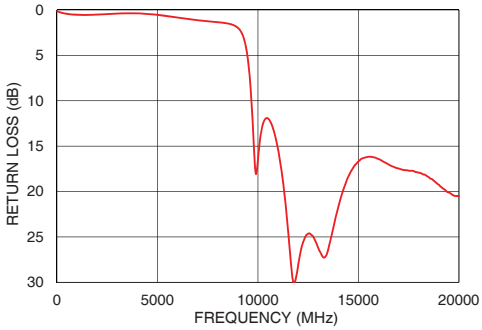

Notes
A. Performance and quality attributes and conditions not expressly stated in this specification document are intended to be excluded and do not form a part of this specification document.
B. Electrical specifications and performance data contained in this specification document are based on Mini-Circuit's applicable established test performance criteria and measurement instructions.
C. The parts covered by this specification document are subject to Mini-Circuits standard limited warranty and terms and conditions (collectively, "Standard Terms"); Purchasers of this part are entitled to the rights and benefits contained therein. For a full statement of the Standard Terms and the exclusive rights and remedies thereunder, please visit Mini-Circuits' website at www.minicircuits.com/MCLStore/terms.jsp

Coaxial Connections

PORT - 1	2.92mm-Female
PORT - 2	2.92mm-Female

Outline Drawing

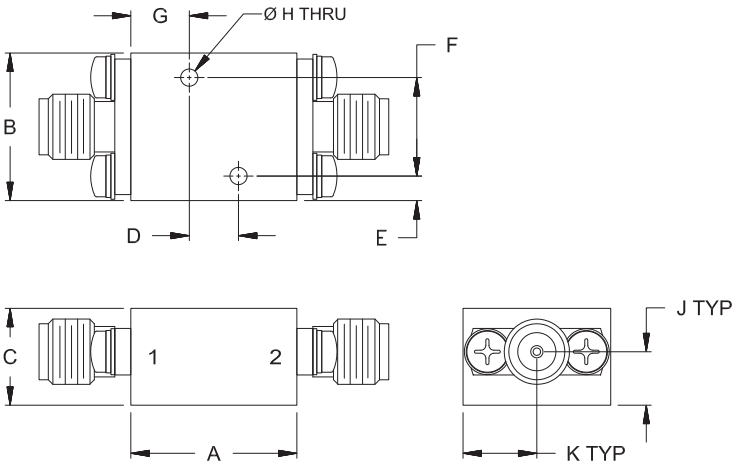

Outline Dimensions (inch / mm)

A	B	C	D	E	F
.68	**.60**	**.39**	**.200**	**.10**	**.400**
17.1	15.2	10.0	5.08	2.5	10.16

G	H	J	K		Wt.
.24	**.070**	**.22**	**.30**		grams
6.0	1.78	5.5	7.6		**24**

Note: Please refer to case style drawing for details

Notes
A. Performance and quality attributes and conditions not expressly stated in this specification document are intended to be excluded and do not form a part of this specification document.
B. Electrical specifications and performance data contained in this specification document are based on Mini-Circuit's applicable established test performance criteria and measurement instructions.
C. The parts covered by this specification document are subject to Mini-Circuits standard limited warranty and terms and conditions (collectively, "Standard Terms"); Purchasers of this part are entitled to the rights and benefits contained therein. For a full statement of the Standard Terms and the exclusive rights and remedies thereunder, please visit Mini-Circuits' website at www.minicircuits.com/MCLStore/terms.jsp

Mini-Circuits®
www.minicircuits.com P.O. Box 350166, Brooklyn, NY 11235-0003 (718) 934-4500 sales@minicircuits.com

Coaxial High Pass Filter ZHFW-K9500+

Typical Performance Data

FREQ. (MHz)	Insertion Loss (dB)	Input Return Loss (dB)	Output Return Loss (dB)
10	77.08	0.12	0.13
50	78.34	0.18	0.18
100	71.86	0.22	0.23
150	67.76	0.25	0.27
200	65.64	0.28	0.30
250	63.75	0.32	0.33
300	62.43	0.34	0.36
350	60.99	0.37	0.39
400	59.94	0.39	0.41
450	59.03	0.41	0.43
500	58.11	0.43	0.45
550	57.34	0.44	0.47
600	56.61	0.46	0.48
700	55.40	0.48	0.51
800	54.36	0.50	0.53
900	53.36	0.52	0.54
1000	52.51	0.53	0.55
1500	49.29	0.54	0.56
2000	47.14	0.50	0.52
2500	45.61	0.45	0.45
3000	44.56	0.39	0.40
3500	43.90	0.36	0.37
4000	43.65	0.37	0.38
4500	43.88	0.43	0.44
5000	44.64	0.53	0.54
5500	46.09	0.67	0.68
6000	48.75	0.83	0.83
7000	57.99	1.13	1.10
7800	38.19	1.31	1.26
8250	30.31	1.41	1.36
8800	20.21	1.68	1.63
9300	10.09	3.14	3.10
9650	4.38	9.12	9.32
10500	2.36	11.96	11.67
11000	1.94	15.35	14.30
11500	1.65	24.33	19.41
12000	1.52	28.15	21.66
12500	1.44	24.65	22.48
13000	1.38	26.23	26.30
13500	1.34	26.35	30.65
14000	1.33	21.70	23.55
14400	1.35	18.87	20.02
14800	1.37	17.16	18.05
15000	1.37	16.69	17.46
15200	1.38	16.35	17.02
15400	1.38	16.22	16.75
15600	1.38	16.17	16.51
15800	1.38	16.24	16.35
16000	1.38	16.42	16.25
16200	1.38	16.65	16.12
16400	1.39	16.89	15.98
16600	1.39	17.15	15.83
16800	1.40	17.33	15.65
17000	1.40	17.47	15.47
17500	1.42	17.70	15.24
18000	1.43	17.93	15.49
18500	1.42	18.42	16.27
19000	1.42	19.26	17.58
19500	1.43	20.10	19.07
20000	1.46	20.51	20.28

FREQ. (MHz)	Group Delay (ns)
10500	0.36
10650	0.35
10800	0.34
10950	0.33
11100	0.32
11250	0.31
11400	0.30
11550	0.29
11700	0.29
11850	0.28
12000	0.27
12150	0.27
12300	0.26
12450	0.26
12600	0.25
12750	0.25
12900	0.25
13050	0.25
13200	0.24
13350	0.24
13500	0.24
13650	0.23
13800	0.23
13950	0.23
14100	0.23
14250	0.23
14400	0.22
14550	0.22
14700	0.22
14850	0.22
15000	0.22
15150	0.22
15300	0.21
15450	0.21
15600	0.21
15750	0.21
15900	0.21
16050	0.21
16200	0.21
16350	0.21
16500	0.21
16650	0.21
16800	0.21
16950	0.21
17100	0.21
17250	0.20
17400	0.20
17550	0.20
17700	0.20
17850	0.20
18000	0.20
18150	0.20
18300	0.20
18450	0.20
18600	0.20
18750	0.20
18900	0.20
19100	0.20
19500	0.20
20000	0.21

Typical Performance Curves

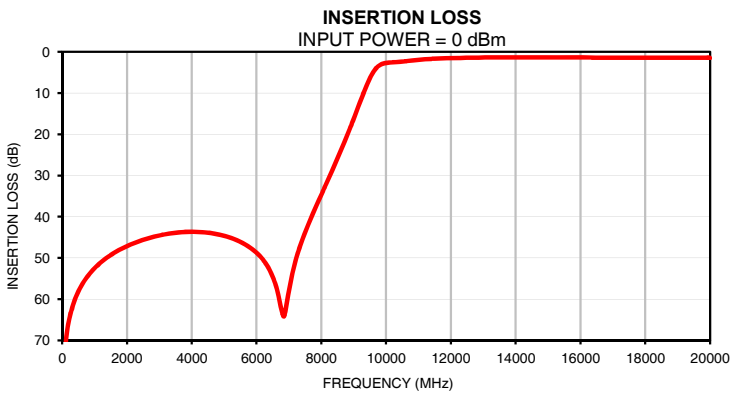

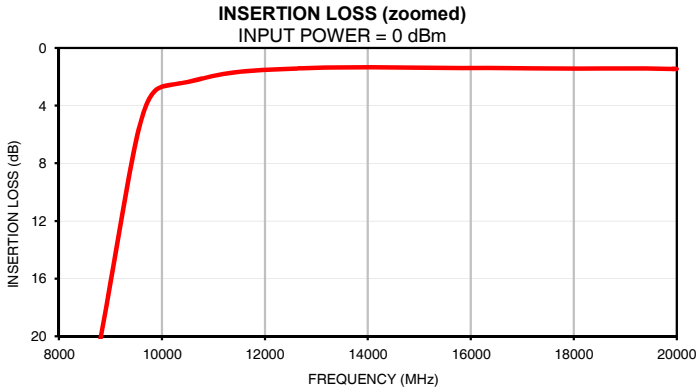

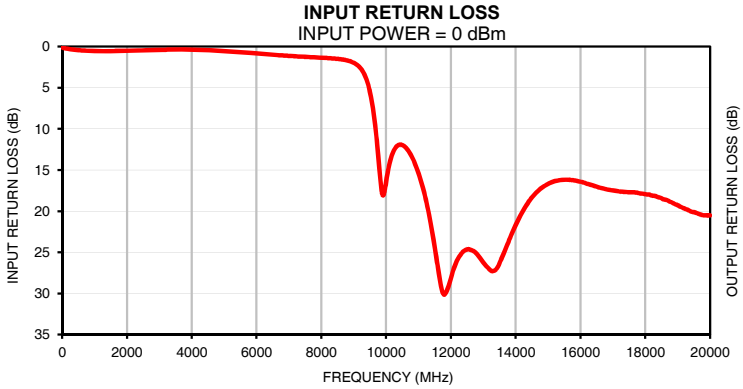

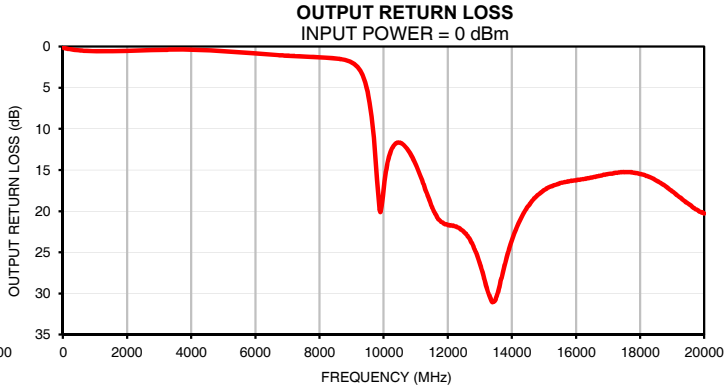

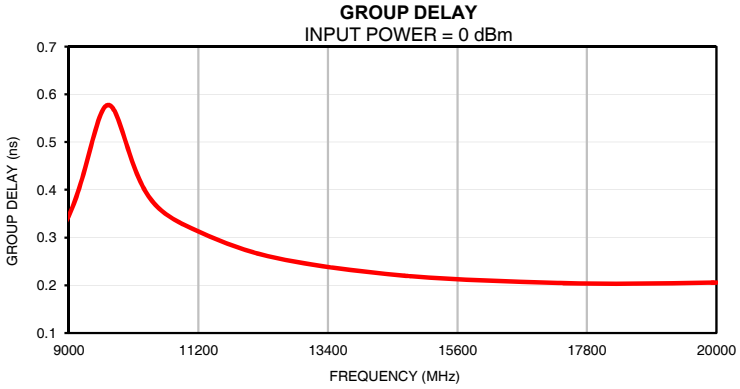

Case Style UK

Outline Dimensions

UK3042

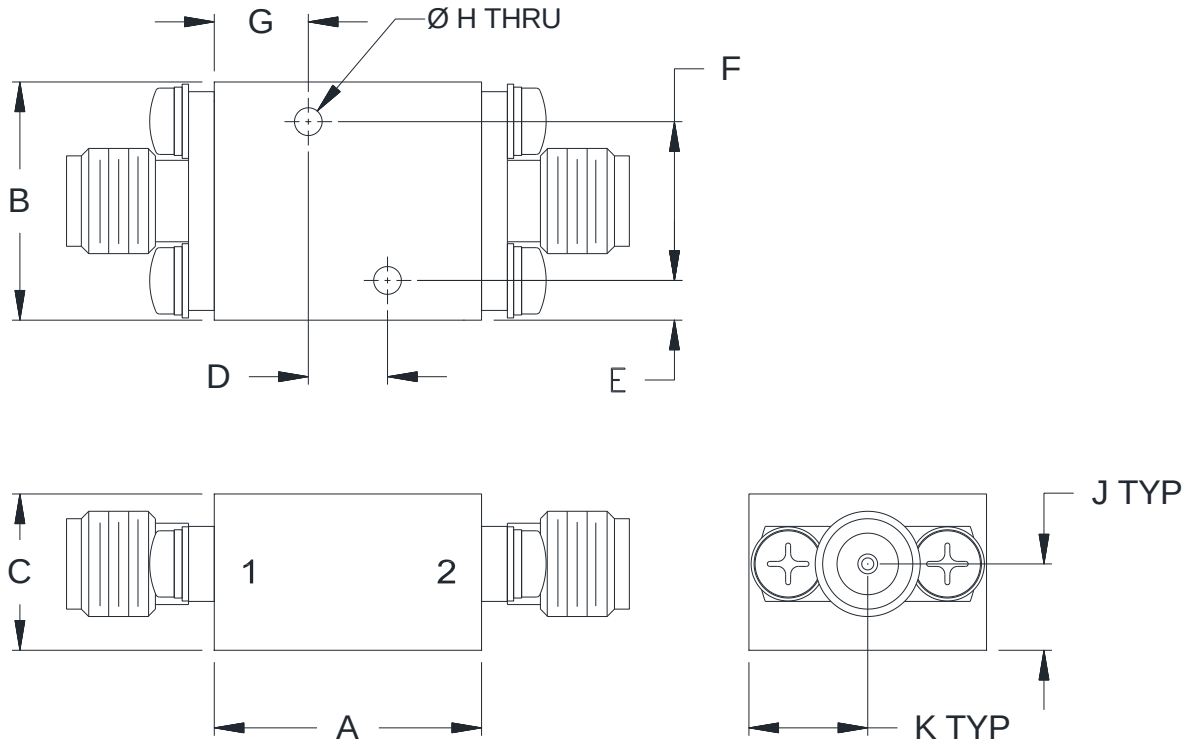

CASE#	A	B	C	D	E	F
UK3042	.68 (17.1)	.60 (15.2)	.39 (10.0)	.200 (5.08)	.10 (2.5)	.400 (10.16)

CASE#	G	H	J	K	WT.GRAMS
UK3042	.24 (6.0)	.070 (1.78)	.22 (5.5)	.30 (7.6)	24

Dimensions are in inches (mm). Tolerances: 2 Pl. ± .050; 3 Pl. ± .015

Notes:

1. Case material: Brass alloy.
2. Case Finish:
   a. Case & Cover of the units –Gold plating.
3. Refer to the individual model data sheet for the type of connectors available.

Mini-Circuits®
ISO 9001 ISO 14001 CERTIFIED
ALL NEW minicircuits.com
P.O. Box 350166, Brooklyn, New York 11235-0003 (718) 934-4500 Fax (718) 332-4661 For detailed performance specs & shopping online see Mini-Circuits web site
The Design Engineers Search Engine Provides ACTUAL Data Instantly From MINI-CIRCUITS At: www.minicircuits.com
RF/IF MICROWAVE COMPONENTS

This document and its contents are the property of Mini-Circuits

Mini-Circuits

Environmental Specifications ENV124

All Mini-Circuits products are manufactured under exacting quality assurance and control standards, and are capable of meeting published specifications after being subjected to any or all of the following physical and environmental test.

Specification	Test/Inspection Condition	Reference/Spec
Operating Temperature	-55° to 125° C Ambient Environment	Individual Model Data Sheet
Storage Temperature	-55° to 125° C Ambient Environment	Individual Model Data Sheet

This document and its contents are the property of Mini-Circuits.