COAXIAL

High Power Amplifier

ZHL0G60G7100+ ZHL0G60G7100X+

50Ω 600 to 700 MHz

THE BIG DEAL

- Saturated power, 100 W typ.
- Wide bandwidth, 600 to 700 MHz
- High gain, 51 dB typ.
- Self-protected from overheating and reverse polarity
- Self-protected against too much reflected power
- Self-protected against too much forward power

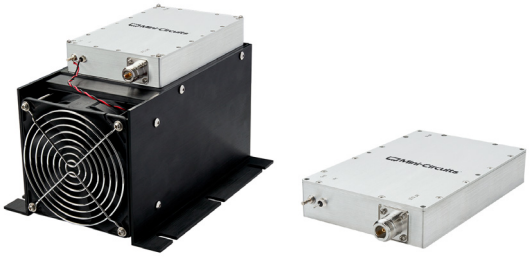

Generic photo used for illustration purposes only

Model No.	ZHL0G60G7100+	ZHL0G60G7100X+
Option	With heatsink and fan	Without heatsink and fan
Case Style	BT3411	
Connectors	IN-SMA, OUT-N	

+RoHS Compliant
The +Suffix identifies RoHS Compliance. See our web site for RoHS Compliance methodologies and qualifications

APPLICATIONS

- High power test sets
- Burn-in set-ups
- Communications
- Satcom

PRODUCT OVERVIEW

The ZHL0G60G7100X+ is a Class AB, high-power amplifier providing typically 100W saturated power in the 600 to 700 MHz band, ideal for a variety of high-power applications such as test setups, communications, and more. The ruggedly designed amplifier provides unconditional stability and built-in protection against reverse polarity, overheating, excessive amounts of forward and reflected power. The amplifier limits the forward power to approximately 51dBm (125W). The amplifier's output stage can operate into and open and short and shuts off when the reflected power exceeds 100W CW. The rugged aluminum alloy enclosure measures 170 x 110 x 30mm and features an SMA connector at the input and an N-connector at the output. A heatsink and fan attachment for cooling are optional.

KEY FEATURES

Feature	Advantages
Usable from 600 to 700 MHz	Suitable for a broad range of high-power applications, including test setups, communications, satcom and other applications.
High power gain, 51 dB typ.	Enables signal amplification up to 125W output power without the need for multiple gain stages.
Built-in protection	Protected from overheating, reverse polarity and excessive reflected power.
Unconditional stability	Provides reliable performance independent of input and load conditions.
Ruggedness	Able to operate into an open and short and shuts off when the reflected power exceeds 100W CW.

REV. OR
ECO-012701
ZHL2G02G7100+
KV/SS/CP
220429

ELECTRICAL SPECIFICATIONS AT $T_{(MOUNTING\ BASE)}$=25°C

Parameter	Symbol	Condition (MHz)	Min.	Typ.	Max.	Units
Frequency Range	f		600		700	MHz
Output power @ 1dB compression	P_{1dB}	f=600-700MHz	48	48.5		dBm
			63	71		W
Output power @ 3dB compression	P_{3dB}	f=600-700MHz	49	50		dBm
			79	100		W
		f=650-660MHz	50	51		dBm
			100	125		W
Small Signal Gain	G_{SS}	f=600-700MHz, P_{IN}=-50dBm	45	50	55	dB
Small Signal Gain Flatness	$G_{SS\text{-}FLAT}$	f=600-700MHz, P_{IN}=-50dBm		± 1.0	± 1.5	dB
Power Gain	G_P	f=600-700MHz, P_{OUT}=P1dB	44	49	54	dB
Power Gain Flatness	$G_{P\text{-}FLAT}$	f=600-700MHz, P_{OUT}=P1dB		± 1.0	± 1.5	dB
Noise Figure	NF	f=600-700MHz		7		dB
Input VSWR	S11	f=600-700MHz, P_{IN}=-50dBm			1.6:1	-
Non-Harmonic Spurious Signals	Spur	P_{OUT}=48dBm		<-60		dBc
DC Supply Voltage	V_{SUPPLY}			28[1]	29	V
DC Supply Current	I_{SUPPLY}	P_{OUT}=50dBm (100W)		12	14	A

1. Typical spec is recommended operating voltage

MAXIMUM RATINGS

Parameter	Ratings
Operating Mounting Base Temperature (1)	-20°C to +80°C
Storage Temperature	-55°C to +100°C
P_{IN} Maximum (No Damage)	+7 dBm
Max. Supply Voltage	29V
Max. Supply Voltage, Reverse Polarity	-29V

1. Mounting Base is the bottom of the amplifier enclosure which attaches to heatsink.

PROTECTIONS

Parameter	Ratings
Mounting Base Temperature	+90°C ± 5°C
Excessive forward power	Limits P_{OUT} to approximately 51dBm (125W)
Output Load Mismatch	No damage with an open or short, shuts off when $P_{REFLECTED}$ exceeds 50dBm ± 1dB

OUTLINE DRAWING FOR MODELS WITH HEATSINK & FAN (ZHL0G60G7100+)

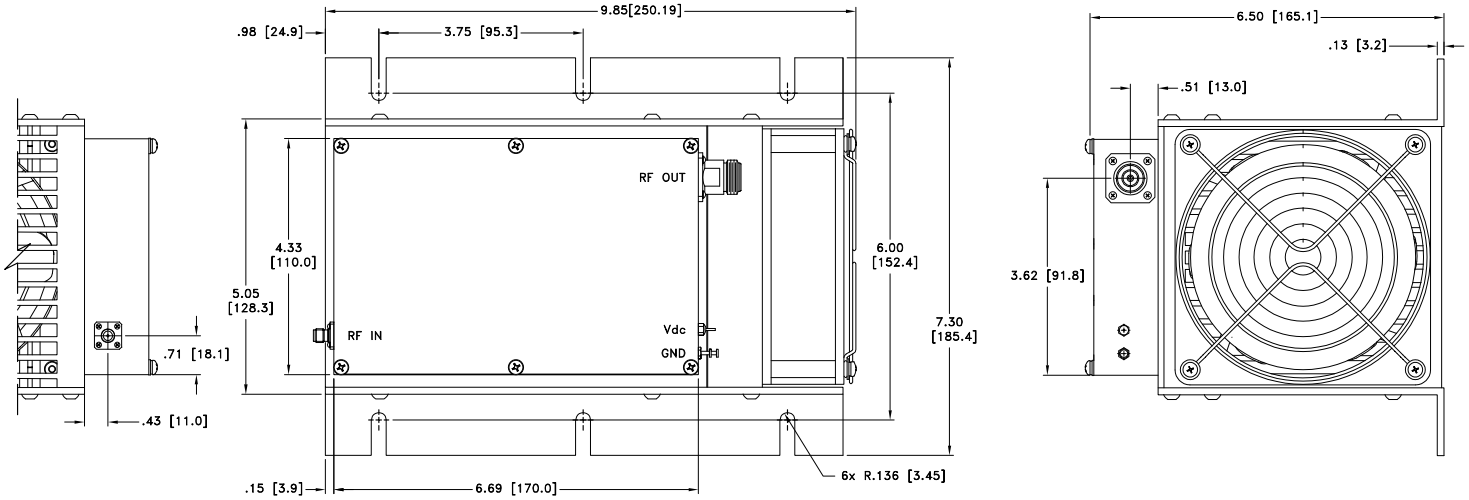

MOUNTING INFORMATION FOR MODELS WITHOUT HEATSINK & FAN (ZHL0G60G7100X+)

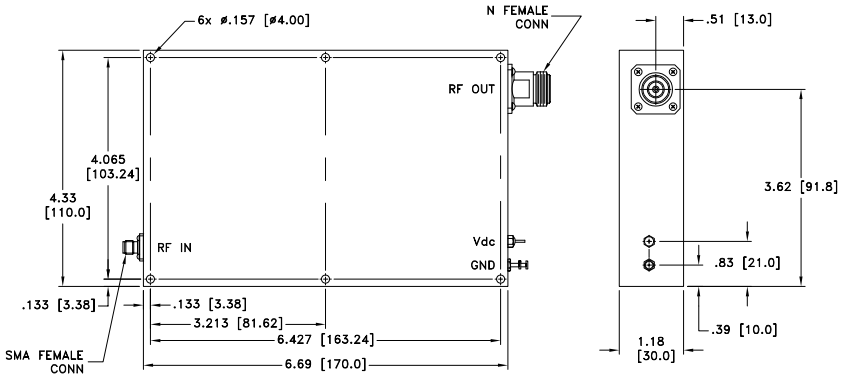

Weight: 4525 grams; Weight without heatsink: 840 grams

Dimensions are in inches [mm]. Tolerances: 2 Pl.±.03[0.76]; 3 Pl. ±.015[0.38]

TYPICAL PERFORMANCE CURVES @V_{DS}=28V

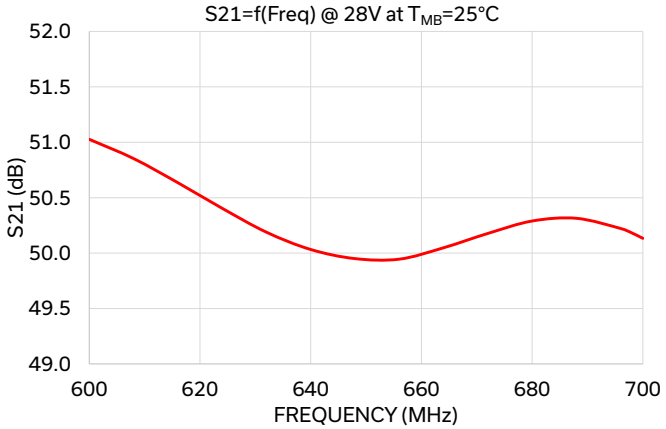

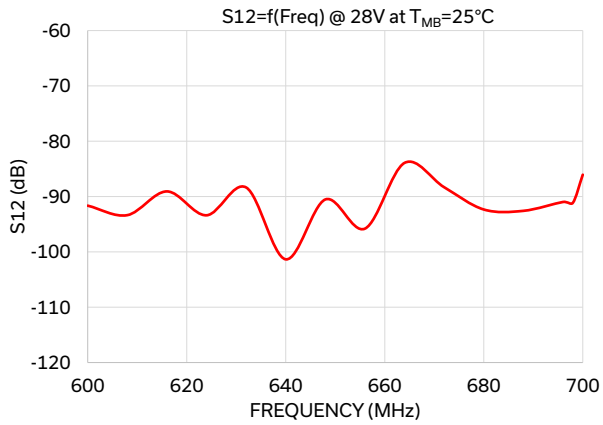

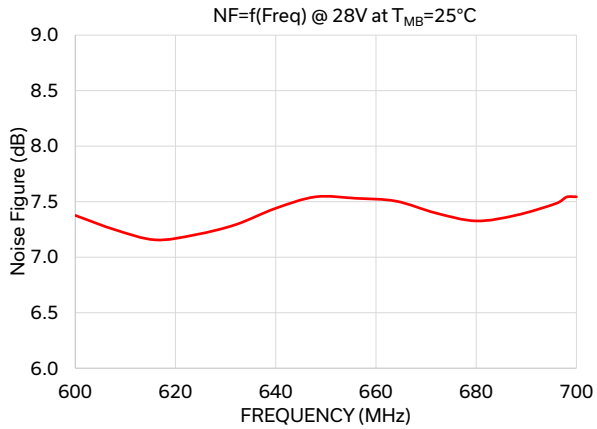

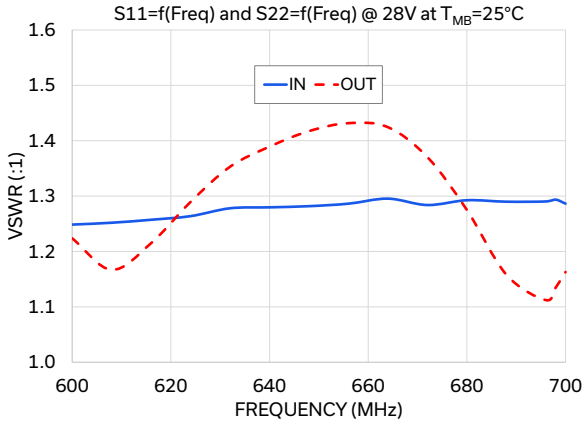

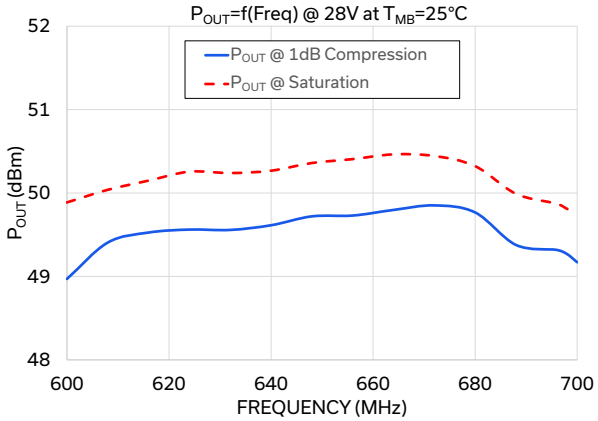

TYPICAL PERFORMANCE CURVES @V_{DS}=28V

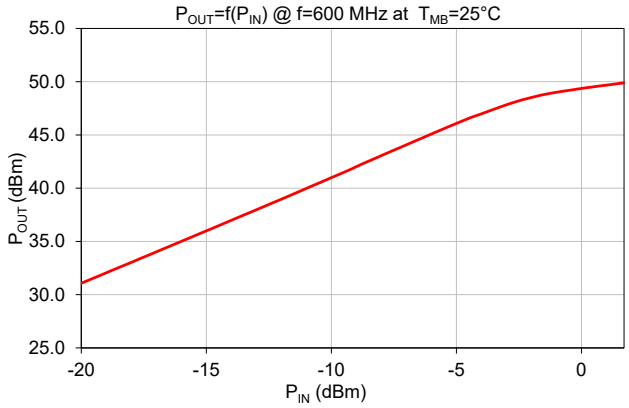

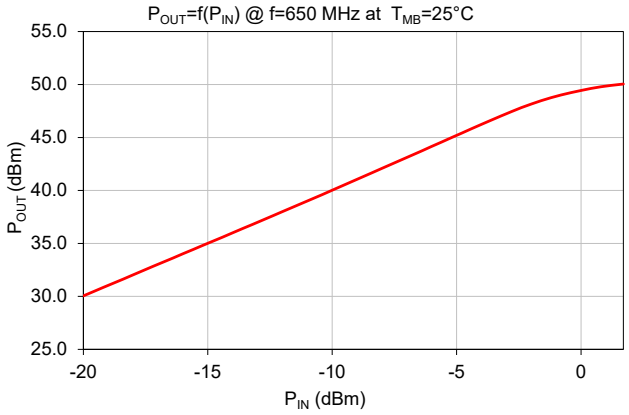

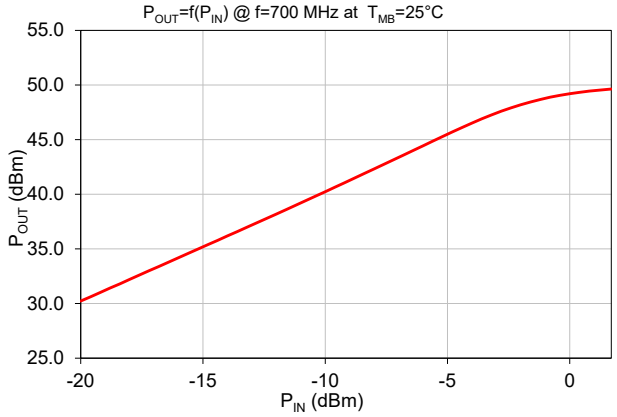

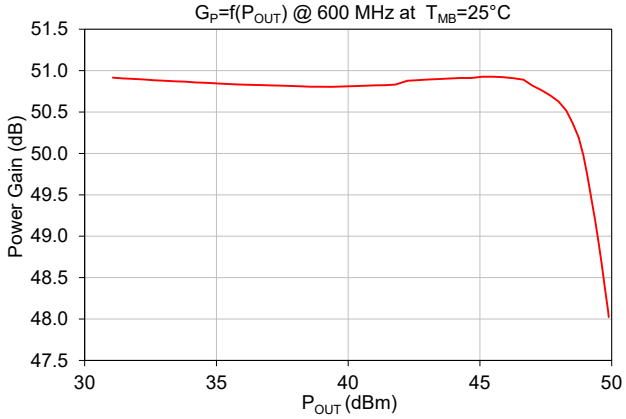

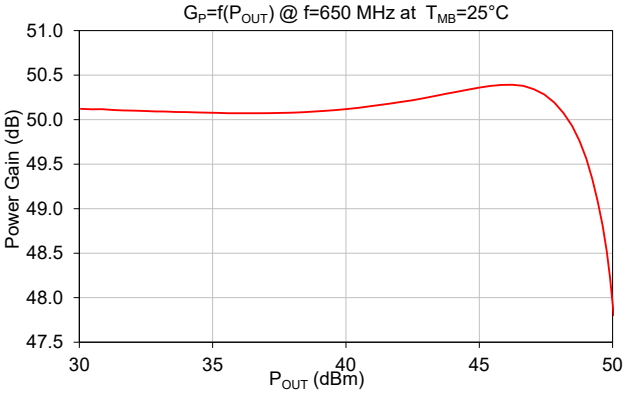

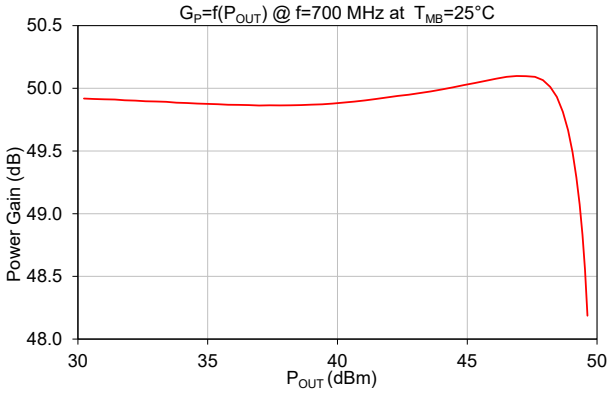

NOTES

A. Performance and quality attributes and conditions not expressly stated in this specification document are intended to be excluded and do not form a part of this specification document.

B. Electrical specifications and performance data contained in this specification document are based on Mini-Circuit's applicable established test performance criteria and measurement instructions.

C. The parts covered by this specification document are subject to Mini-Circuits standard limited warranty and terms and conditions (collectively, "Standard Terms"); Purchasers of this part are entitled to the rights and benefits contained therein. For a full statement of the standard. Terms and the exclusive rights and remedies thereunder, please visit Mini-Circuits' website at www.minicircuits.com/terms/viewterm.html

Case Style BT

Outline Dimensions

BT3411

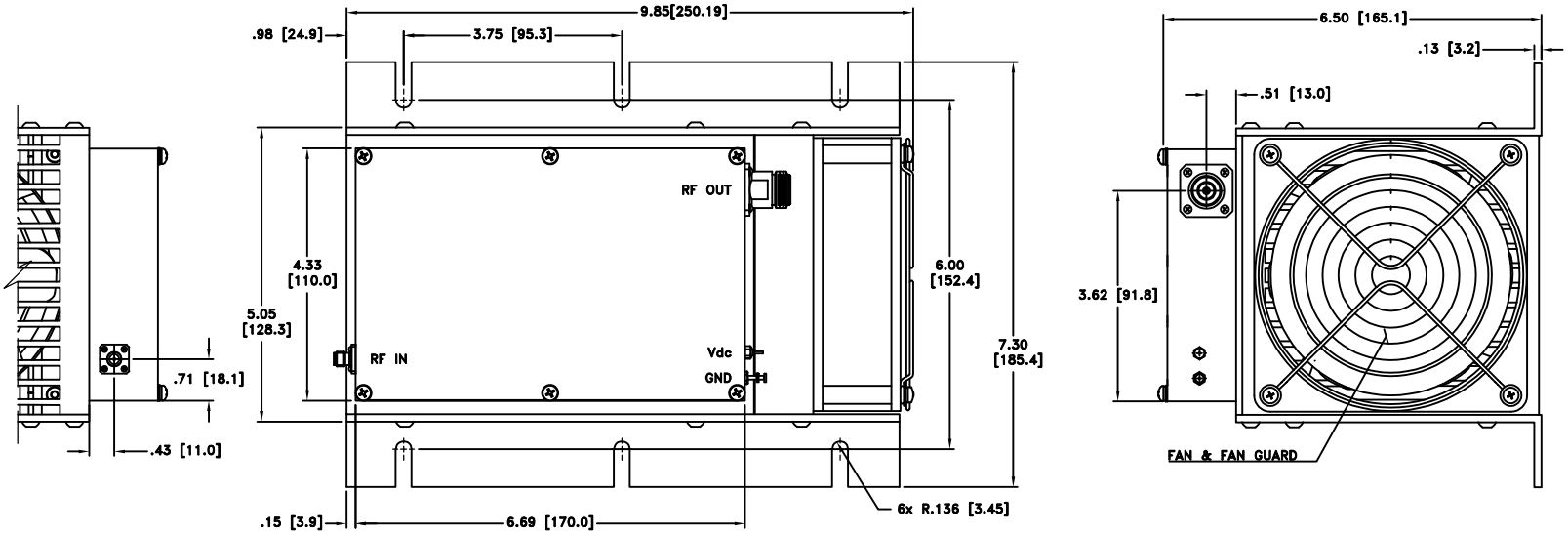

MOUNTING INFORMATION FOR MODELS WITHOUT HEATSINK

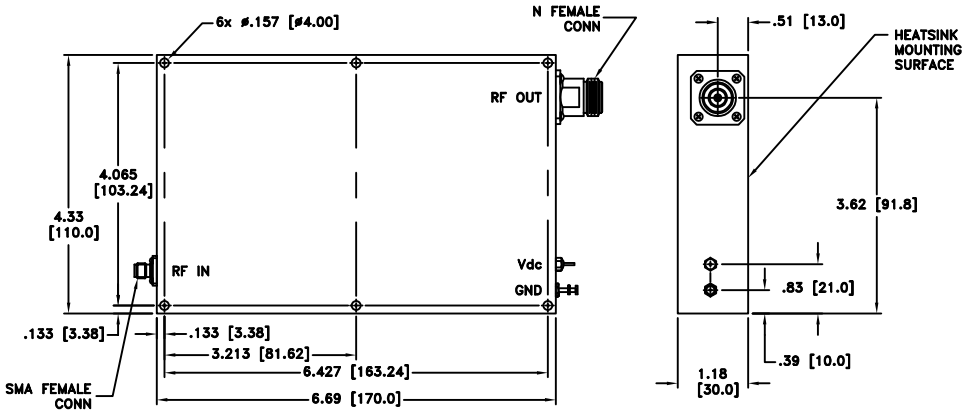

Weight: 4525 grams; Weight without heatsink: 840 grams

Dimensions are in inches [mm]. Tolerances: 2 Pl.±.03[.76]; 3 Pl. ±.015[.38]

Notes:

1. Case material: Aluminum alloy.
2. Finish: For RoHS Case Styles: Clear Chemical conversion coating, non-chrome or trivalent chrome based.
3. Heatsink finish: Black anodize.
4. Refer to the individual model data sheet for the type of connectors available.
5. Recommended screws for mounting model without heat sink on 3/32” thick sheet: #6-32, 1.50” Length.
6. Shape of connector flange may vary.

Mini-Circuits®
ISO 9001 ISO 14001 CERTIFIED
ALL NEW minicircuits.com
P.O. Box 350166, Brooklyn, New York 11235-0003 (718) 934-4500 Fax (718) 332-4661 For detailed performance specs & shopping online see Mini-Circuits web site
The Design Engineers Search Engine Provides ACTUAL Data Instantly From MINI-CIRCUITS At: www.minicircuits.com
RF/IF MICROWAVE COMPONENTS

This document and its contents are the property of Mini-Circuits

Mini-Circuits

Environmental Specifications ENV23T29

All Mini-Circuits products are manufactured under exacting quality assurance and control standards, and are capable of meeting published specifications after being subjected to any or all of the following physical and environmental test.

Specification	Test/Inspection Condition	Reference/Spec
Operating Temperature	-20° to +80° C	Individual Model Data Sheet
Storage Temperature	-55° to 100° C Ambient Environment	Individual Model Data Sheet
Stabilization Bake	(Non-operating) 125°C, 24 hours	- - -
DC Burn-in	(DC on) 112 hours at 80°C	---
Thermal Shock	-55°C to +100°C, 100 cycles, 15 mins dwell at extreme temperatures	MIL-STD-202, Method 107
Thermal Imaging	With Output open, short and load conditions	---
Vibration	Category 24, Exposure level figure 514C-17. General use, Random Vibration, 1 hr/axis 20-1000Hz - Amplitude PSD (0.040 G2/Hz). 1000 to 2000 Hz - Amplitude PSD (-6dB/octave)	MIL-STD-810F Method 514.5
Mechanical Shock	Terminal peak sawtooth, 40G's, 11 ms, 3 shocks +/-, Each Axis, 18 Shock Pulses Total	MIL-STD-810F Method 516.5

This document and its contents are the property of Mini-Circuits.