Coaxial

Switch

50Ω SPDT Pin Diode, Reflective TTL Driver 10 to 3000 MHz

ZSDR-230+

Generic photo used for illustration purposes only

CASE STYLE: CCC127

Connectors	Model
SMA	ZSDR-230+

+RoHS Compliant

The +Suffix identifies RoHS Compliance. See our web site for RoHS Compliance methodologies and qualifications

Maximum Ratings

Operating Temperature	-55°C to 100°C
Storage Temperature	-55°C to 100°C
Power	L(+20 dBm), M(+28 dBm), U(+30 dBm)
Supply V	+6V max.

Permanent damage may occur if any of these limits are exceeded.

Coaxial/Pin Connections

RF IN	COM
RF OUT 1	RF-1
RF OUT 2	RF-2
TTL-IN	TTL
+5V	+5V

Features

- wideband, 10 to 3000 MHz
- high isolation, 40 dB typ.

Applications

- test set-ups
- antenna switching
- satellite communications

Switch Electrical Specifications

MODEL NO.	FREQ. (MHz)		INSERTION LOSS (dB)				IN-OUT ISOLATION (dB)					
			Low band lw		Upper band U		Frequency Band L		M		U	
	f_L	f_U	Typ.	Max.	Typ.	Max.	Typ.	Min.	Typ.	Min.	Typ.	Min.
ZSDR-230+	10	3000	1.3	1.9	1.8	2.7	60	40	40	28	35	22

L= low range(f_L to 10 f_L) M=mid range(10 f_L to f_U/2) U=upper range (f_U/2 to f_U)
lw=low band (f_L to f_U/2)

Outline Drawing

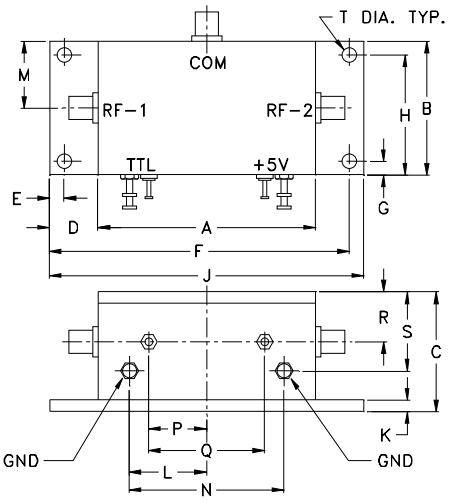

Outline Dimensions (inch / mm)

A	B	C	D	E	F	G	H	J
2.25	1.38	1.24	.50	.150	3.100	.138	1.238	3.25
57.15	35.05	31.50	12.70	3.81	78.74	3.51	31.45	82.55

K	L	M	N	P	Q	R	S	T	wt
.12	.80	.69	1.60	.60	1.200	.52	.82	.150	grams
3.05	20.32	17.53	40.64	15.24	30.48	13.21	20.83	3.81	80.0

Additional Specifications	
VSWR ("ON" STATE)	1.3 Typ., 1.9 Max.
SWITCHING TIME (μSEC)	2.0 Typ., 4.0 Max.
SUPPLY VOLTAGE	+5V
SUPPLY CURRENT	10mA Max.
TTL INPUT HIGH THRESHOLD	2V Min.
TTL INPUT LOW THRESHOLD	0.8V Max.
1 dB COMPRESSION 10 to 100 MHz Above 100 MHz	 +6 increasing to +19 dBm +19 dBm min.

Control Logic

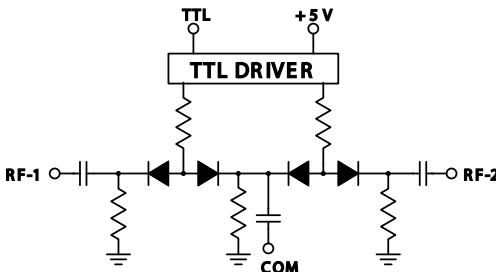

TTL LOGIC		
TTL 1:	RF-1/OFF	RF-2/ON
TTL 0:	RF-1/ON	RF-2/OFF

Notes
A. Performance and quality attributes and conditions not expressly stated in this specification document are intended to be excluded and do not form a part of this specification document.
B. Electrical specifications and performance data contained in this specification document are based on Mini-Circuit's applicable established test performance criteria and measurement instructions.
C. The parts covered by this specification document are subject to Mini-Circuits standard limited warranty and terms and conditions (collectively, "Standard Terms"); Purchasers of this part are entitled to the rights and benefits contained therein. For a full statement of the Standard Terms and the exclusive rights and remedies thereunder, please visit Mini-Circuits' website at www.minicircuits.com/MCLStore/terms.jsp

REV. C
M151107
ZSDR-230+
WP/CP/AM
200501

Typical Performance Data

FREQ. (MHz)	ON (TTL LOW @ 0V) IN-OUT		INSERTION LOSS (dB) AMP. UNBAL.		OFF (TTL HIGH @ 5V) IN-OUT		ISOLATION (dB) DELTA		VSWR IN	VSWR OUT (RF 1) ON	VSWR OUT (RF 1) OFF
	$\bar{x}$	σ	$\bar{x}$	σ	$\bar{x}$	σ	$\bar{x}$	σ	$\bar{x}$	$\bar{x}$	$\bar{x}$
10.00	1.18	0.04	0.03	0.02	74.26	1.60	1.14	0.39	1.37	1.41	31.26
20.00	1.06	0.05	0.05	0.05	69.20	1.46	1.45	1.51	1.20	1.22	30.31
50.00	0.92	0.03	0.02	0.01	61.84	1.14	1.60	1.01	1.12	1.12	30.07
100.00	0.88	0.03	0.02	0.01	55.48	0.61	0.75	0.63	1.09	1.10	30.07
200.00	0.88	0.02	0.02	0.01	49.81	0.72	0.64	0.70	1.09	1.09	30.49
500.00	0.94	0.02	0.02	0.01	42.32	0.56	0.53	0.77	1.11	1.11	29.97
552.91	0.94	0.02	0.01	0.01	41.56	0.50	0.61	0.74	1.12	1.10	28.88
792.00	1.02	0.01	0.01	0.01	39.41	0.46	0.68	0.76	1.13	1.12	26.27
1000.00	1.06	0.01	0.01	0.01	37.86	0.40	0.67	0.71	1.12	1.10	24.84
1102.82	1.10	0.01	0.01	0.01	37.96	0.40	0.70	0.73	1.12	1.08	22.83
1341.91	1.16	0.01	0.02	0.01	37.13	0.42	0.94	0.69	1.12	1.06	21.66
1509.27	1.19	0.02	0.02	0.01	36.81	0.45	0.96	0.75	1.14	1.07	20.69
1652.73	1.21	0.01	0.02	0.01	37.32	0.53	0.89	0.79	1.17	1.09	19.92
1891.82	1.27	0.02	0.02	0.02	37.64	0.67	1.82	0.71	1.23	1.14	19.28
2130.91	1.38	0.02	0.02	0.03	38.60	1.13	0.82	0.94	1.27	1.20	24.87
2370.00	1.31	0.02	0.03	0.03	36.48	3.02	2.00	1.04	1.31	1.31	19.46
2609.09	1.50	0.04	0.06	0.03	30.37	2.46	0.49	0.56	1.34	1.37	11.80
2848.18	1.63	0.06	0.04	0.02	27.51	2.19	0.30	0.21	1.28	1.41	10.49
2919.91	1.56	0.04	0.03	0.02	26.87	2.12	0.56	0.28	1.27	1.41	9.46
3000.00	1.58	0.04	0.05	0.03	26.08	2.02	0.86	0.48	1.24	1.35	11.35

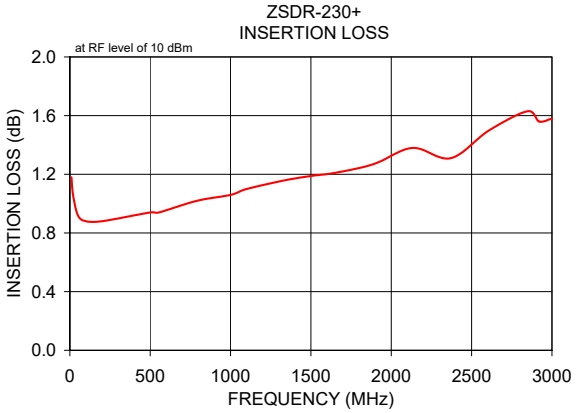

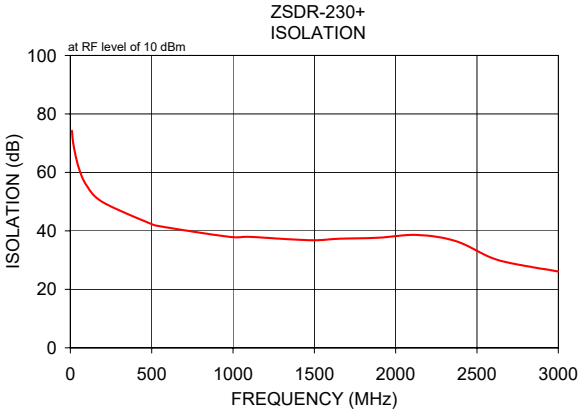

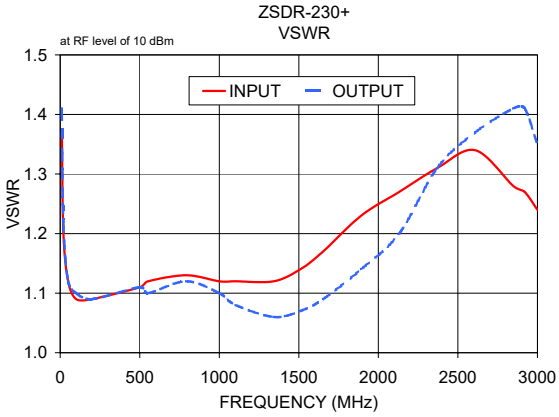

Notes
A. Performance and quality attributes and conditions not expressly stated in this specification document are intended to be excluded and do not form a part of this specification document.
B. Electrical specifications and performance data contained in this specification document are based on Mini-Circuit's applicable established test performance criteria and measurement instructions.
C. The parts covered by this specification document are subject to Mini-Circuits standard limited warranty and terms and conditions (collectively, "Standard Terms"); Purchasers of this part are entitled to the rights and benefits contained therein. For a full statement of the Standard Terms and the exclusive rights and remedies thereunder, please visit Mini-Circuits' website at www.minicircuits.com/MCLStore/terms.jsp

Switch SPDT , 50Ω

ZSDR-230+

Typical Performance Data

FREQUENCY (MHz)	INSERTION LOSS TTL Low @ 0V (dB) IN-OUT , "ON"	ISOLATION TTL High @ 5V (dB) IN-OUT , "OFF"	VSWR (:1) IN	VSWR (:1) OUT , "ON"	VSWR (:1) OUT , "OFF"
10	1.18	74.26	1.37	1.41	31.26
20	1.06	69.20	1.20	1.22	30.31
50	0.92	61.84	1.12	1.12	30.07
100	0.88	55.48	1.09	1.10	30.07
200	0.88	49.81	1.09	1.09	30.49
500	0.94	42.32	1.11	1.11	29.97
553	0.94	41.56	1.12	1.10	28.88
792	1.02	39.41	1.13	1.12	26.27
1000	1.06	37.86	1.12	1.10	24.84
1103	1.10	37.96	1.12	1.08	22.83
1342	1.16	37.13	1.12	1.06	21.66
1509	1.19	36.81	1.14	1.07	20.69
1653	1.21	37.32	1.17	1.09	19.92
1892	1.27	37.64	1.23	1.14	19.28
2131	1.38	38.60	1.27	1.20	24.87
2370	1.31	36.48	1.31	1.31	19.46
2609	1.50	30.37	1.34	1.37	11.80
2848	1.63	27.51	1.28	1.41	10.49
2920	1.56	26.87	1.27	1.41	9.46
3000	1.58	26.08	1.24	1.35	11.35

Typical Performance Curves

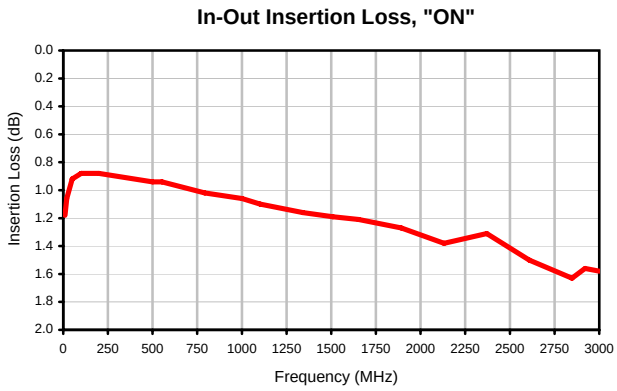

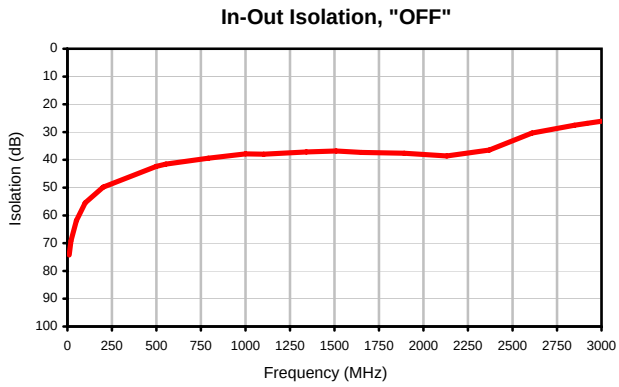

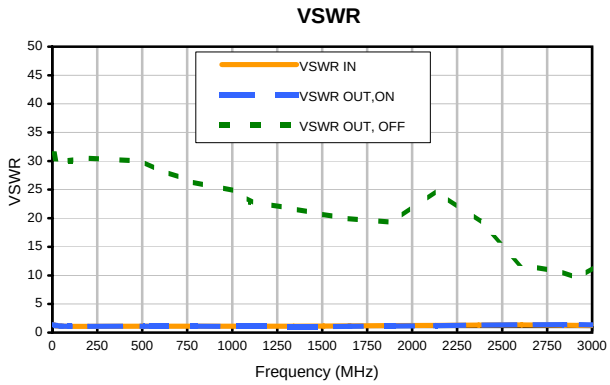

Case Style CCC

CCC127

Outline Dimensions

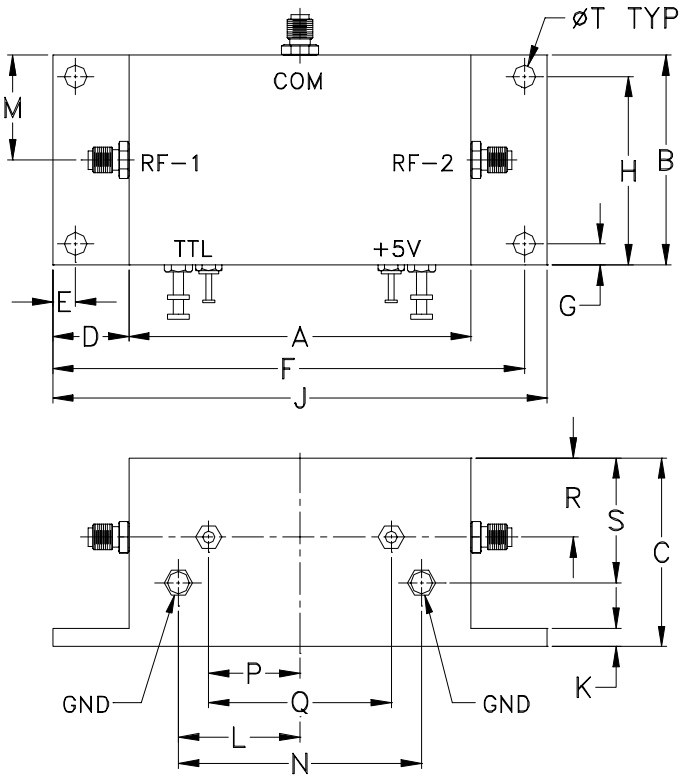

CASE#	A	B	C	D	E	F	G	H	J	K	L	M	N
CCC127	2.25 (57.15)	1.38 (35.05)	1.24 (31.50)	.50 (12.70)	.150 (3.81)	3.100 (78.74)	.138 (3.51)	1.238 (31.45)	3.25 (82.55)	.12 (3.05)	.80 (20.32)	.69 (17.53)	1.60 (40.64)

CASE#	P	Q	R	S	T	WT. GRAMS
CCC127	.60 (15.24)	1.200 (30.48)	.52 (13.21)	.82 (20.83)	.150 (3.81)	80.0

Dimensions are in inches (mm). Tolerances: 2 Pl. ± .03; 3 Pl. ± .015

Notes:

1. Case material: Aluminum alloy.
2. Case finish:
   For RoHS Case Styles: Clear chemical conversion coating, non-chrome or trivalent chrome based.

Mini-Circuits®
INTERNET http://www.minicircuits.com
P.O. Box 350166, Brooklyn, New York 11235-0003 (718) 934-4500 Fax (718) 332-4661
Distribution Centers NORTH AMERICA 800-654-7949 • 417-335-5935 • Fax 417-335-5945 • EUROPE 44-1252-832600 • Fax 44-1252-837010
Mini-Circuits ISO 9001 & ISO 14001 Certified

This document and its contents are the property of Mini-Circuits

Mini-Circuits

Environmental Specifications ENV28

All Mini-Circuits products are manufactured under exacting quality assurance and control standards, and are capable of meeting published specifications after being subjected to any or all of the following physical and environmental test.

Specification	Test/Inspection Condition	Reference/Spec
Operating Temperature	-55° to 100°C Ambient Environment	Individual Model Data Sheet
Storage Temperature	-55° to 100° C Ambient Environment	Individual Model Data Sheet
Barometric Pressure	100,000 Feet	MIL-STD-202, Method 105, Condition D
Humidity	90% RH, 65°C Units may require bake-out after humidity to restore full performance.	MIL-STD-202, Method 103
Thermal Shock	-65° to 125°C, 5 cycles	MIL-STD-202, Method 107, Condition B
Vibration (High Frequency)	20g peak, 10-2000 Hz, 12 times in each of three perpendicular directions (total 36)	MIL-STD-202, Method 204, Condition D
Mechanical Shock	100g, 6ms sawtooth, 3 shocks each direction 3 axes (total 18)	MIL-STD-202, Method 213, Condition I

This document and its contents are the property of Mini-Circuits.