COAXIAL WIDEBAND

Medium Power Amplifier

ZVA-0.5W303G+ ZVA-0.5W303GX+

50Ω 0.5W 10 MHz to 30 GHz

THE BIG DEAL

- Wideband 10 MHz to 30 GHz
- Output Power 0.5 watt, at Saturation
- Excellent Gain Flatness, ±1.5 dB typ. from 100 MHz to 26.5 GHz
- Low Noise Figure, 4.2 dB typ. from 1 to 26.5 GHz
- Over-Voltage & Reverse Voltage Protection
- Single Bias Voltage of 12V

Generic photo used for illustration purposes only

Model No.	ZVA-0.5W303G+	ZVA-0.5W303GX+▲
Case Style	AV2554-3	
Connectors	2.92mm female	

+RoHS Compliant
The +Suffix identifies RoHS Compliance. See our web site for RoHS Compliance methodologies and qualifications

APPLICATIONS

- Test and Measurements
- 5G Sub-6 GHz and Millimeter Wave
- Aerospace and Defense
- Radio, Radars and Satellite Systems
- Industrial, Scientific and Medical

PRODUCT OVERVIEW

Mini-Circuits' ZVA-0.5W303G+ is an ideal choice for applications requiring a wideband driver amplifier. This coaxial, wideband RF amplifier operates over 10 MHz to 30 GHz, delivering a saturated output power of +27 dBm at a typical 1dB compression point of +25 dBm. Ideal for many applications that require higher dynamic range, with a low noise figure of 4.2 dB typ. across majority of the band. A combination of this amplifier with the lab test setups, makes it a versatile choice for high power test applications. Complementary safety features such as protection against DC transients, over-voltage and reverse voltage conditions ensure that the amplifier stays protected against mishandling.

KEY FEATURES

Feature	Advantages
Ultra-wideband, 0.01 to 30 GHz	Enables a single amplifier to be used in a wide range of applications.
Excellent gain flatness, ±1.5 dB across full frequency range	Provides consistent performance across its operating frequency, minimizing the need for external equalizing networks in wideband applications.
Low noise and high IP3: • NF, 4.2 dB typ. • IP3, +34 dBm typ.	The combination of low noise and high IP3 makes the ZVA-0.5W303G+ ideal for use in receiver front end (RFE) as it gives the user the advantages of sensitivity and two-tone IM performance at both ends of the dynamic range.
Rugged design	Built-in protection against DC transients, reverse voltage and over-voltage provides added reliability for demanding operating conditions.

ELECTRICAL SPECIFICATION AT 25 °C (AMBIENT), VDD = 12V TYP.

Parameter	Condition (GHz)	ZVA-0.5W303G+ ZVA-0.5W303GX+▲ Min.	Typ.	Max.	Units
Frequency Range		.01		30	GHz
Gain	.01 – 10	21	24.5		dB
	10 – 26.5	20.5	24.5		
	26.5 – 30	20	23		
Gain Flatness	0.10 - 26.5		± 1.5		dB
Output Power at 1dB compression	.01 –.05	23	25		dBm
	.05 – 10	24	27		
	10 – 26.5	22.5	25		
	26.5 – 30	20.5	23		
Saturated Output Power[1]	.01 – .05	27	29		dBm
	.05 – 10	26	29		
	10 – 26.5	24	27		
	26.5 – 30	22.5	26		
Noise Figure	1– 26.5		4.2	7	dB
	26.5 – 30		6.5	7.5	
Output IP3 (output power = 10 dBm/tone)	.01 – 10		37		dBm
	10 – 26.5		32		
	26.5 – 30		30		
Input VSWR	.05 – 10		1.4		:1
	10 – 26.5		1.6		
	26.5 – 30		2		
Output VSWR	.05 – 10		1.2		:1
	10 – 26.5		1.8		
	26.5 – 30		2		
DC Supply Voltage (VDD)		11	12	13	V
Supply Current[2]			460	600	mA

1. With Input Power up to +15 dBm.
2. Maximum Supply Current is specified at Saturated Output Power.

▲ For unit without heatsink, the baseplate temperature must be limited to 75°C. at max. ambient temperature. Suitable heat-sinking mechanism must be provided to ensure the baseplate does not exceed this temperature.

MAXIMUM RATINGS[4]

Parameter	Ratings
Operating Temperature (Ambient)	0° to +50 °C
Storage Temperature	-20° to +70 °C
Total Power Dissipation	7.5 watts
RF Input Power[3] (CW), VDD=12V	+16 dBm
DC Voltage	+14V

3. Specified under matched load to 50 ohms.
4. Continuous operation is not recommended at these extremes. Permanent damage may occur if any of these limits are exceeded.

OUTLINE DRAWING

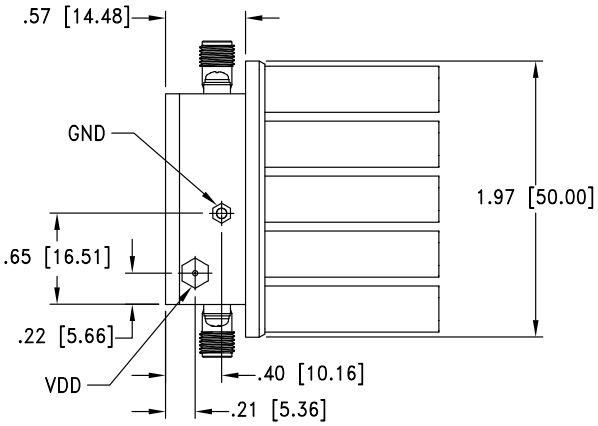

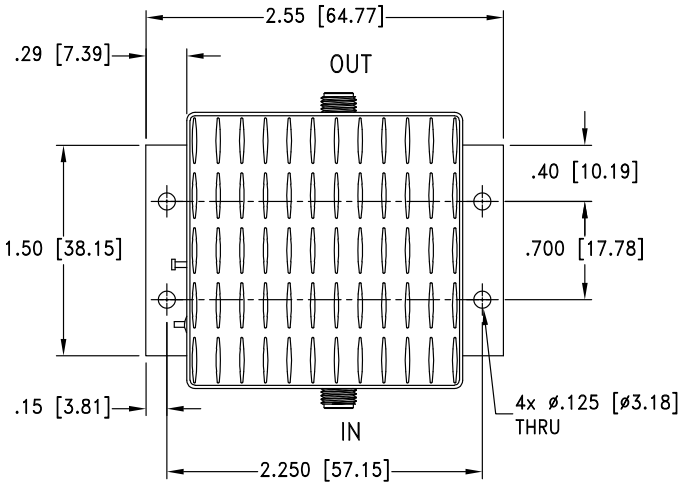

MOUNTING INFORMATION OF MODEL WITHOUT HEATSINK

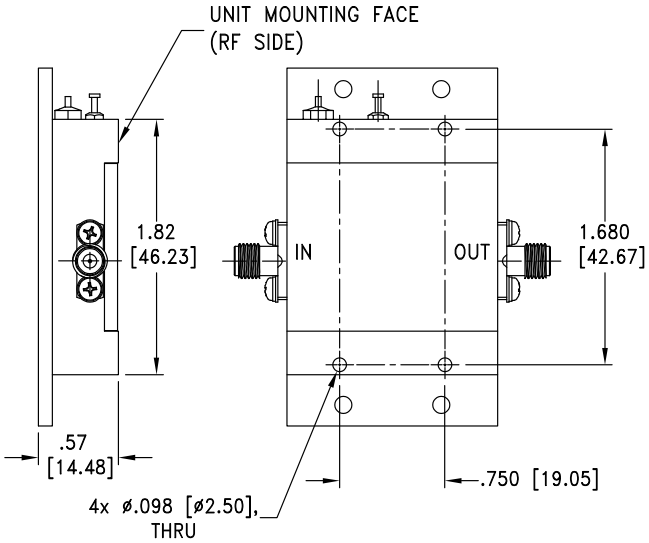

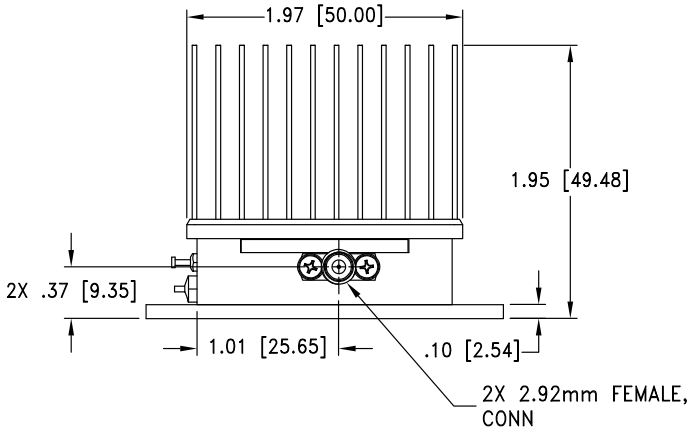

Weight without heatsink: 345 grams; Weight: 455 grams;

Dimensions are in inches [mm]. Tolerances: 2 Pl.±.03; 3 Pl. ±.015

TYPICAL PERFORMANCE DATA/CURVES

Frequency (MHz)	Gain (dB)	Directivity (dB)	VSWR (:1)		Noise Figure (dB)	Pout at 1 dB Compr. (dBm)	Pout at Saturation (dBm)	OIP3 (dBm)
	12V	12V	IN	OUT	12V	12V	12V	12V
10	24.50	54.92	2.22	1.74	-	23.91	29.88	35.16
3000	25.50	68.44	1.06	1.10	4.78	28.21	30.04	39.26
5000	24.63	64.00	1.09	1.05	3.67	28.32	30.02	40.98
9000	23.57	57.06	1.64	1.24	2.92	26.98	28.16	37.67
10000	23.82	59.26	1.54	1.32	3.11	26.65	27.99	37.11
13000	24.40	48.16	1.25	1.36	3.37	25.97	27.95	35.63
15000	25.12	39.58	1.09	1.39	3.75	25.76	28.59	35.14
18000	24.94	37.76	1.39	1.22	4.30	26.17	28.56	33.97
20000	24.38	38.45	1.11	1.77	4.79	25.22	28.51	33.35
23000	25.02	32.64	1.44	2.11	5.70	25.40	27.49	32.68
27000	23.06	24.31	1.08	2.21	6.25	25.11	26.49	31.93
30000	24.69	23.20	1.75	1.81	6.98	23.02	25.71	30.38

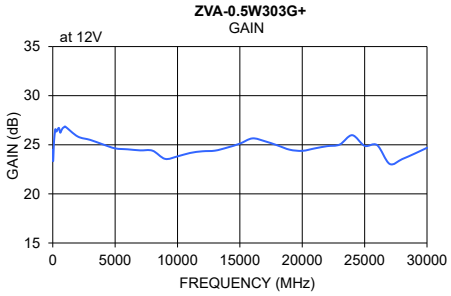

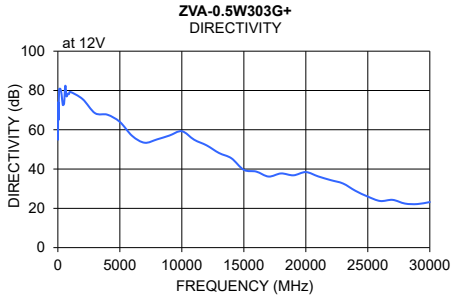

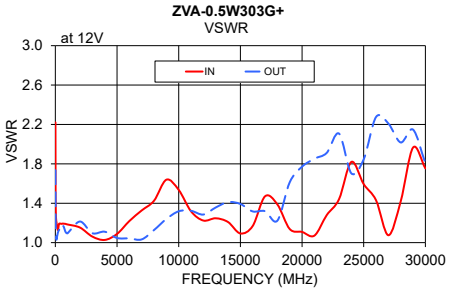

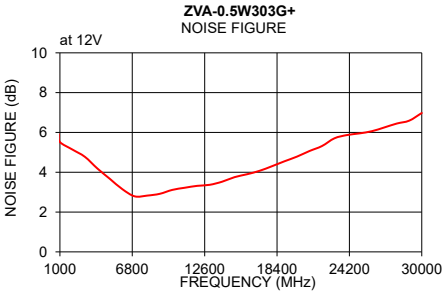

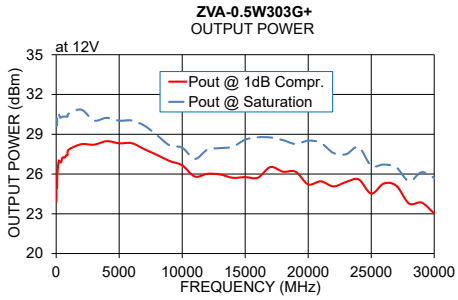

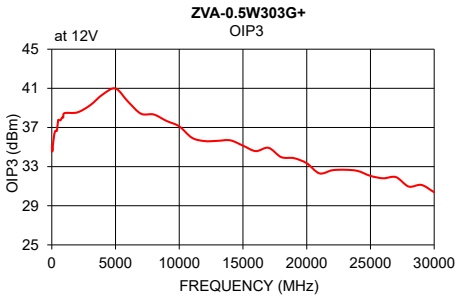

NOTES

A. Performance and quality attributes and conditions not expressly stated in this specification document are intended to be excluded and do not form a part of this specification document.

B. Electrical specifications and performance data contained in this specification document are based on Mini-Circuit's applicable established test performance criteria and measurement instructions.

C. The parts covered by this specification document are subject to Mini-Circuits standard limited warranty and terms and conditions (collectively, "Standard Terms"); Purchasers of this part are entitled to the rights and benefits contained therein. For a full statement of the standard. Terms and the exclusive rights and remedies thereunder, please visit Mini-Circuits' website at www.minicircuits.com/MCLStore/terms.jsp

Coaxial Amplifier ZVA-0.5W303G+

Typical Performance Data

FREQ. (MHz)	GAIN (dB) 12V	DIRECTIVITY (dB) 12V	VSWR (:1) IN 12V	VSWR (:1) OUT 12V	NOISE FIGURE (dB) 12V	Pout @ 1 dB COMPRESSION (dBm) 12V	Pout @ SATURATION (dBm) 12V	OUTUPUT IP3 (dBm) 12V
10	24.50	54.92	2.22	1.74	24.62	23.91	29.88	35.16
20	23.40	69.39	1.54	1.32	18.53	25.10	29.79	34.89
30	23.33	74.06	1.37	1.19	16.85	24.95	29.64	34.69
40	23.51	71.03	1.30	1.13	16.04	25.05	29.87	34.55
50	23.82	64.94	1.26	1.09	15.41	24.99	29.88	34.63
60	24.17	68.19	1.24	1.07	14.94	24.98	29.73	34.67
70	24.52	73.63	1.23	1.05	14.49	25.18	29.89	34.76
80	24.84	75.25	1.22	1.03	13.92	25.71	30.32	35.07
90	25.11	77.82	1.21	1.03	13.30	25.97	30.28	35.22
100	25.34	80.76	1.20	1.03	12.64	26.07	30.22	35.30
100	25.34	80.76	1.20	1.03	12.64	26.07	30.22	35.30
200	26.57	80.81	1.13	1.10	11.99	27.01	30.53	36.34
300	26.35	78.04	1.19	1.13	9.06	26.89	30.27	36.67
400	26.59	72.59	1.19	1.14	9.06	26.89	30.27	36.67
500	26.71	73.22	1.19	1.13	6.58	27.25	30.33	37.75
600	26.23	82.44	1.19	1.17	6.58	27.25	30.33	37.75
700	26.48	77.10	1.19	1.15	6.58	27.25	30.33	37.75
800	26.69	78.30	1.19	1.12	5.92	27.43	30.34	38.02
900	26.78	78.12	1.19	1.10	5.92	27.43	30.34	38.02
1000	26.85	79.26	1.18	1.10	5.52	27.84	30.56	38.46
2000	25.84	75.59	1.15	1.21	5.14	28.25	30.85	38.54
3000	25.50	68.44	1.06	1.10	4.78	28.21	30.04	39.26
4000	25.05	67.65	1.03	1.11	4.19	28.48	30.24	40.38
5000	24.63	64.00	1.09	1.05	3.67	28.32	30.02	40.98
6000	24.54	56.84	1.22	1.04	3.15	28.33	30.04	39.61
7000	24.43	53.39	1.33	1.03	2.79	27.87	29.65	38.41
8000	24.40	55.09	1.43	1.13	2.83	27.44	28.93	38.33
9000	23.57	57.06	1.64	1.24	2.92	26.98	28.16	37.67
10000	23.82	59.26	1.54	1.32	3.11	26.65	27.99	37.11
11000	24.16	54.90	1.32	1.32	3.22	25.81	27.14	35.95
12000	24.34	52.05	1.22	1.29	3.32	26.01	27.84	35.61
13000	24.40	48.16	1.25	1.36	3.37	25.97	27.95	35.63
14000	24.72	45.48	1.21	1.41	3.53	25.72	28.05	35.69
15000	25.12	39.58	1.09	1.39	3.75	25.76	28.59	35.14
16000	25.65	38.71	1.17	1.32	3.90	25.72	28.77	34.58
17000	25.36	36.18	1.47	1.32	4.07	26.52	28.76	34.92
18000	24.94	37.76	1.39	1.22	4.30	26.17	28.56	33.97
19000	24.50	36.81	1.14	1.61	4.55	26.17	28.26	33.86
20000	24.38	38.45	1.11	1.77	4.79	25.22	28.51	33.35
21000	24.63	36.25	1.07	1.85	5.07	25.45	28.35	32.31
22000	24.86	34.37	1.28	1.91	5.32	25.06	27.59	32.63
23000	25.02	32.64	1.44	2.11	5.70	25.40	27.49	32.68
24000	25.98	28.93	1.82	1.70	5.87	25.60	28.03	32.56
25000	24.90	25.97	1.59	1.85	5.95	24.53	26.63	32.05
26000	24.97	23.73	1.43	2.28	6.06	25.28	26.71	31.81
27000	23.06	24.31	1.08	2.21	6.25	25.11	26.49	31.93
28000	23.54	22.42	1.42	2.02	6.45	23.77	25.45	30.96
29000	24.09	22.18	1.97	2.15	6.59	23.84	26.14	31.13
30000	24.69	23.20	1.75	1.81	6.98	23.02	25.71	30.38

Typical Performance Curves

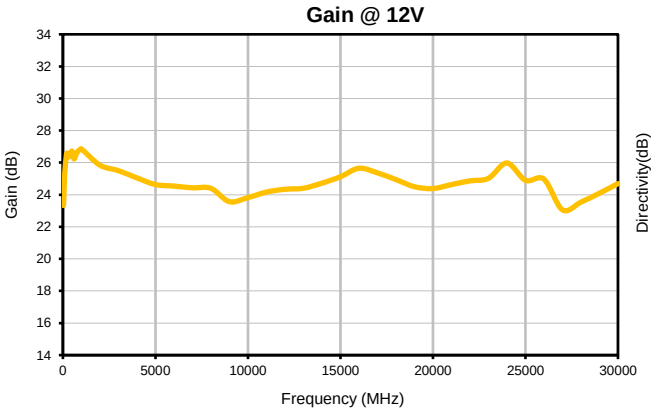

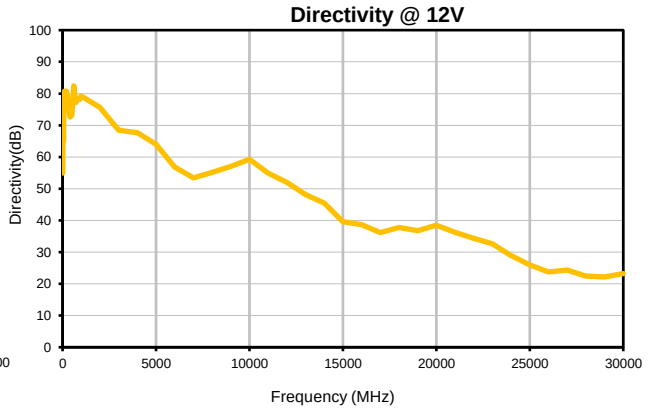

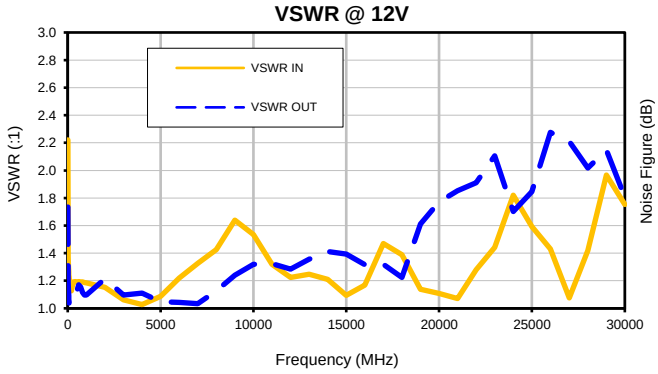

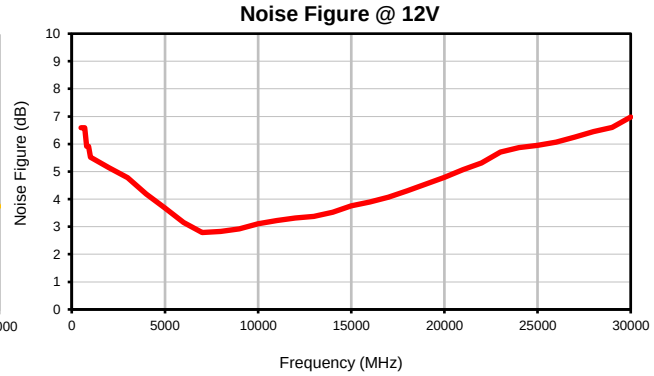

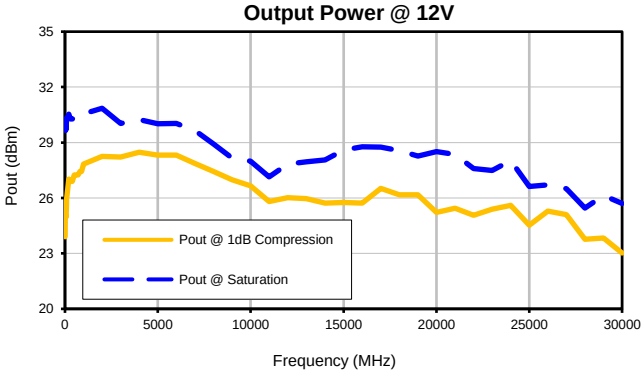

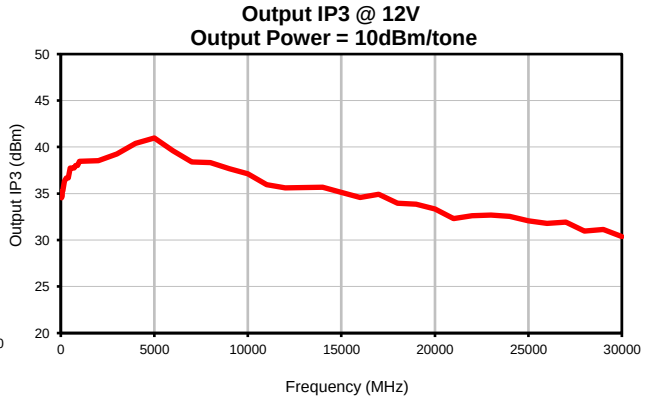

Case Style AV

Outline Dimensions

AV2554-3

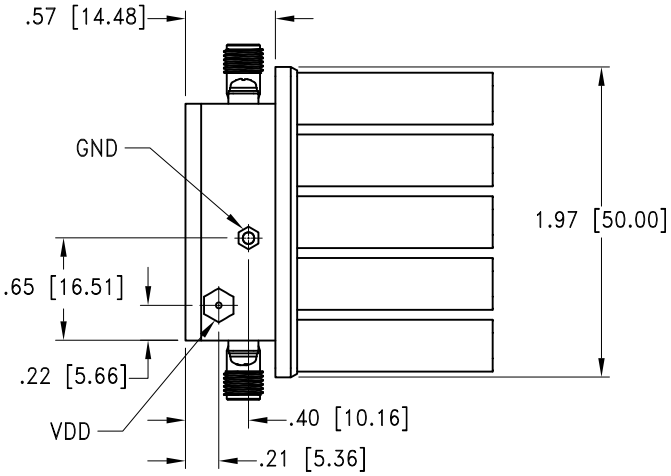

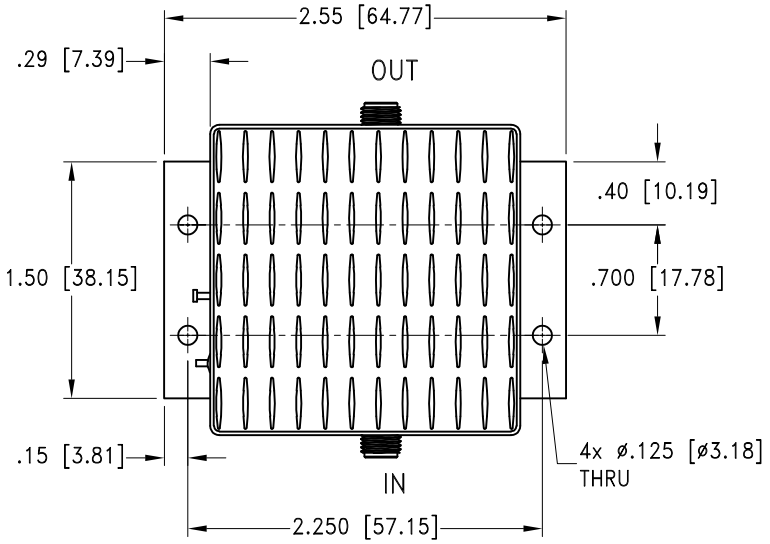

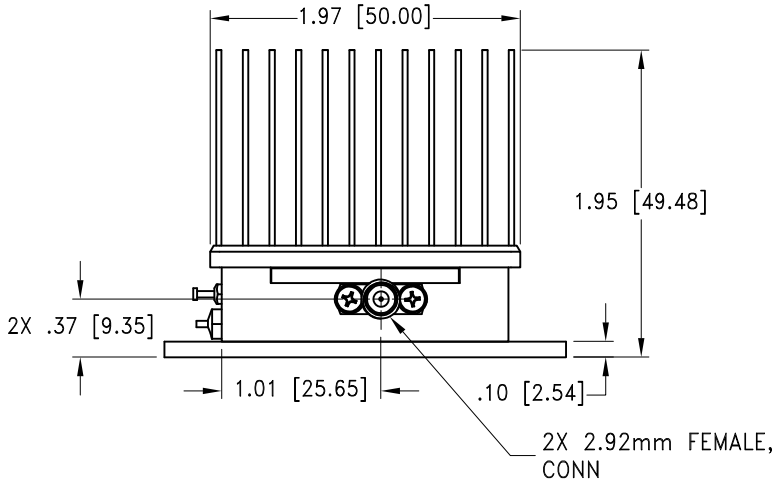

MOUNTING INFORMATION OF MODEL WITHOUT HEATSINK

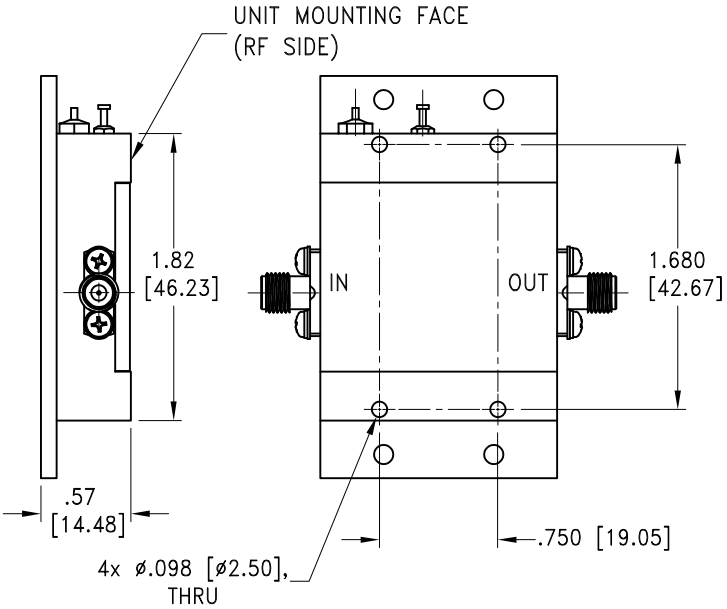

Weight without heatsink: 345 grams;

Weight: 455 grams;

Dimensions are in inches (mm). Tolerances: 2 Pl.±.03; 3 Pl. ±.015

Notes:
1. Case material: Brass
2. Case finish: Gold plate.
3. Heat sink finish: Black anodize.

Mini-Circuits®
ISO 9001 ISO 14001 CERTIFIED
ALL NEW minicircuits.com
P.O. Box 350166, Brooklyn, New York 11235-0003 (718) 934-4500 Fax (718) 332-4661 For detailed performance specs & shopping online see Mini-Circuits web site
The Design Engineers Search Engine Provides ACTUAL Data Instantly From MINI-CIRCUITS At: www.minicircuits.com
RF/IF MICROWAVE COMPONENTS

This document and its contents are the property of Mini-Circuits

Mini-Circuits

Environmental Specifications ENV76

All Mini-Circuits products are manufactured under exacting quality assurance and control standards, and are capable of meeting published specifications after being subjected to any or all of the following physical and environmental test.

Specification	Test/Inspection Condition	Reference/Spec
Operating Temperature	-0° to 50° C Ambient Environment	Individual Model Data Sheet
Storage Temperature	-20° to 70° C (non condensing)	Individual Model Data Sheet

This document and its contents are the property of Mini-Circuits.