Coaxial

Bandpass Filter

ZX75BP-A70-S+

50Ω 62 to 78 MHz

CASE STYLE: HY1239

The Big Deal

- Low insertion loss of typical 1dB
- Good Matching and good out of band rejection
- Connectorized package

Product Overview

ZX75BP-A70-S+ is a low loss bandpass filter in a rugged connectorized package covering 62 to 78 MHz. This offers lower pass band insertion loss and good rejection. It has repeatable performance across lots and consistent performance across temperature.

Key Features

Feature	Advantages
Low insertion loss	Lower insertion loss result in better SNR in receiver front end and better power delivery to antenna in transmitter.
Good matching and good out of band rejection	This filter has good matching, which enables maximum power transform and better out of band rejection results in wide spur free band.
Connectorized package	Connectorized package is easy to interface with other devices and well suited for test setups.

Notes
A. Performance and quality attributes and conditions not expressly stated in this specification document are intended to be excluded and do not form a part of this specification document.
B. Electrical specifications and performance data contained in this specification document are based on Mini-Circuit's applicable established test performance criteria and measurement instructions.
C. The parts covered by this specification document are subject to Mini-Circuits standard limited warranty and terms and conditions (collectively, "Standard Terms"); Purchasers of this part are entitled to the rights and benefits contained therein. For a full statement of the Standard Terms and the exclusive rights and remedies thereunder, please visit Mini-Circuits' website at www.minicircuits.com/MCLStore/terms.jsp

Mini-Circuits®
www.minicircuits.com P.O. Box 350166, Brooklyn, NY 11235-0003 (718) 934-4500 sales@minicircuits.com

Coaxial

Bandpass Filter

50Ω 62 to 78 MHz

ZX75BP-A70-S+

CASE STYLE: HY1239

Connectors	Model
SMA-F	ZX75BP-A70-S+

Features

- Low insertion loss of 1 dB typical
- Good matching and good out of band rejection.
- Connectorized package

Applications

- Wire-line broad band access
- IF signal processing
- Fixed satellite
- VHF Television

Electrical Specifications at 25°C

Parameter		F#	Frequency (MHz)	Min.	Typ.	Max.	Unit
Pass Band	Center Frequency	-	-	-	70	-	MHz
	Insertion Loss	F1-F2	62-78	-	1.0	1.6	dB
	VSWR	F1-F2	62-78	-	1.25	1.5	:1
Stop Band, Lower	Insertion Loss	DC-F3	1-11	50	62	-	dB
		F3-F4	11-29	25	33	-	dB
	VSWR	DC-F4	1 - 29	-	20	-	:1
Stop Band, Upper	Insertion Loss	F5-F6	110-250	25	32	-	dB
		F6-F7	250-3000	40	57	-	dB
		F7-F8	3000-3300	20	44	-	dB
	VSWR	F5-F8	110-3300	-	20	-	:1

Maximum Ratings	
Operating Temperature	-40°C to 85°C
Storage Temperature	-55°C to 100°C
RF Power Input	1 W Max.

Permanent damage may occur if any of these limits are exceeded.

Functional Schematic

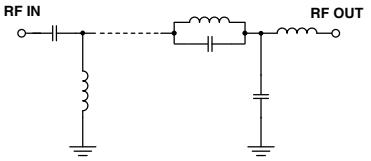

Typical Performance Data at 25°C

Frequency (MHz)	Insertion Loss (dB)	VSWR (:1)	Frequency (MHz)	Group Delay (ns)
1	96.86	97.44	62.0	25.89
11	63.25	78.29	62.5	25.25
29	34.79	61.95	63.0	24.65
33	30.07	59.96	63.5	24.12
41	20.63	51.22	64.0	23.69
49	10.13	19.99	66.0	22.54
53	4.75	6.63	67.0	22.23
55	2.64	3.53	68.0	22.07
62	0.70	1.13	69.0	21.96
70	0.71	1.05	70.0	21.91
78	0.93	1.15	71.0	21.90
86	3.46	3.19	72.0	21.92
90	8.28	8.33	73.0	21.98
99	20.13	22.91	75.0	22.37
108	30.68	31.40	75.5	22.54
110	33.04	32.71	76.0	22.77
250	57.76	101.86	76.5	23.02
1000	71.65	182.89	77.0	23.35
3000	74.61	61.30	77.5	23.75
3300	56.25	57.17	78.0	24.21

Typical Frequency Response

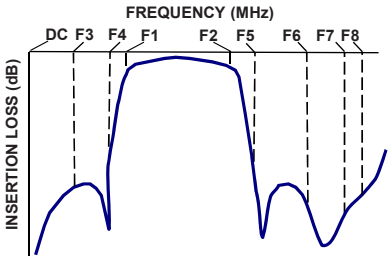

+RoHS Compliant

The +Suffix identifies RoHS Compliance. See our web site for RoHS Compliance methodologies and qualifications

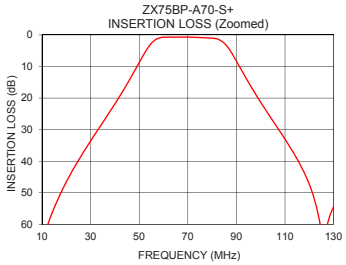

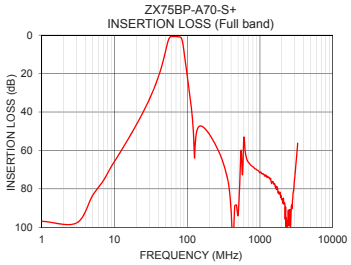

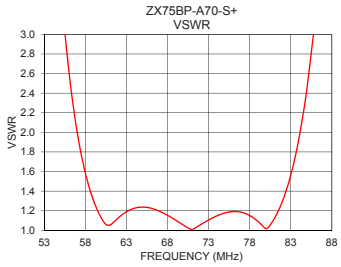

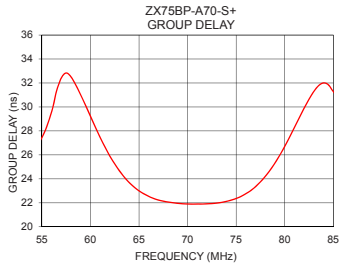

Notes

A. Performance and quality attributes and conditions not expressly stated in this specification document are intended to be excluded and do not form a part of this specification document.

B. Electrical specifications and performance data contained in this specification document are based on Mini-Circuit's applicable established test performance criteria and measurement instructions.

C. The parts covered by this specification document are subject to Mini-Circuits standard limited warranty and terms and conditions (collectively, "Standard Terms"); Purchasers of this part are entitled to the rights and benefits contained therein. For a full statement of the Standard Terms and the exclusive rights and remedies thereunder, please visit Mini-Circuits' website at www.minicircuits.com/MCLStore/terms.jsp

Coaxial Connections

INPUT	SMA-FEMALE
OUTPUT	SMA-FEMALE

Outline Drawing

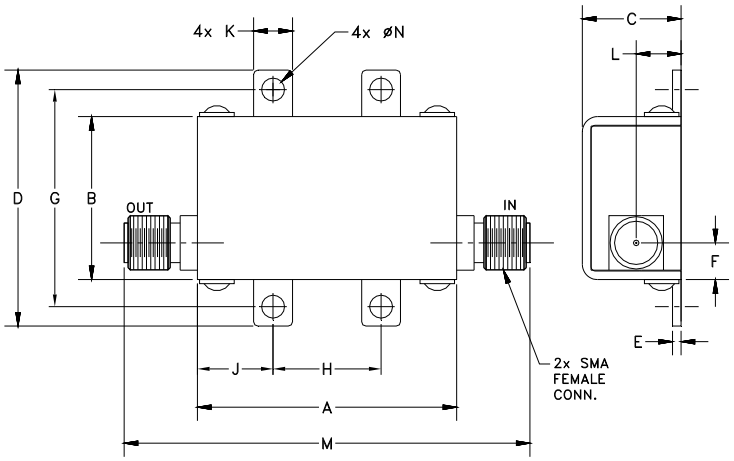

Outline Dimensions (inch / mm)

A	B	C	D	E	F	G
1.20	**.75**	**.46**	**1.18**	**.04**	**.17**	**1.00**
30.48	19.05	11.68	29.97	1.02	4.32	25.40

H	J	K	L	M	N	Wt.
.50	**.35**	**.18**	**.21**	**1.88**	**.106**	grams
12.70	8.89	4.57	5.28	47.75	2.69	35.0

Notes
A. Performance and quality attributes and conditions not expressly stated in this specification document are intended to be excluded and do not form a part of this specification document.
B. Electrical specifications and performance data contained in this specification document are based on Mini-Circuit's applicable established test performance criteria and measurement instructions.
C. The parts covered by this specification document are subject to Mini-Circuits standard limited warranty and terms and conditions (collectively, "Standard Terms"); Purchasers of this part are entitled to the rights and benefits contained therein. For a full statement of the Standard Terms and the exclusive rights and remedies thereunder, please visit Mini-Circuits' website at www.minicircuits.com/MCLStore/terms.jsp

Mini-Circuits®
www.minicircuits.com P.O. Box 350166, Brooklyn, NY 11235-0003 (718) 934-4500 sales@minicircuits.com

Coaxial Band Pass Filter ZX75BP-A70-S+

Typical Performance Data

FREQ.	INSERTION LOSS			INPUT RETURN LOSS			OUTPUT RETURN LOSS		
(MHz)	(dB)			(dB)			(dB)		
	@-40°C	@+25˚C	@+85˚C	@-40°C	@+25˚C	@+85˚C	@-40°C	@+25˚C	@+85˚C
1	100.68	96.86	100.38	0.13	0.18	0.21	0.07	0.09	0.10
5	84.59	83.42	85.44	0.15	0.19	0.22	0.08	0.11	0.12
7	75.39	75.82	75.40	0.16	0.20	0.23	0.09	0.12	0.13
9	68.77	68.47	68.62	0.17	0.21	0.24	0.11	0.13	0.15
11	63.34	63.25	63.26	0.18	0.22	0.25	0.12	0.14	0.16
15	54.85	54.82	54.75	0.20	0.24	0.26	0.13	0.16	0.18
21	45.11	45.12	45.11	0.22	0.26	0.28	0.16	0.19	0.20
23	42.36	42.37	42.33	0.23	0.27	0.29	0.17	0.20	0.21
25	39.72	39.74	39.72	0.23	0.27	0.29	0.18	0.21	0.22
27	37.20	37.22	37.20	0.24	0.28	0.30	0.19	0.22	0.23
29	34.77	34.79	34.77	0.24	0.28	0.30	0.20	0.23	0.24
31	32.40	32.41	32.40	0.25	0.28	0.30	0.20	0.23	0.25
33	30.06	30.07	30.06	0.26	0.29	0.31	0.21	0.25	0.26
35	27.73	27.74	27.73	0.26	0.29	0.31	0.22	0.26	0.28
41	20.62	20.63	20.61	0.31	0.34	0.36	0.29	0.32	0.34
43	18.14	18.14	18.13	0.35	0.38	0.40	0.33	0.37	0.39
45	15.58	15.57	15.55	0.42	0.45	0.47	0.42	0.45	0.48
49	10.17	10.13	10.11	0.83	0.87	0.90	0.84	0.89	0.92
53	4.80	4.75	4.73	2.53	2.64	2.72	2.56	2.68	2.76
55	2.68	2.64	2.64	4.83	5.06	5.20	4.86	5.08	5.23
60	0.68	0.73	0.78	23.23	25.17	26.38	22.52	23.77	24.37
62	0.63	0.70	0.75	26.39	24.48	23.49	26.21	24.30	23.29
65	0.65	0.71	0.76	20.04	19.48	19.10	20.54	19.98	19.57
70	0.64	0.71	0.76	31.77	32.34	31.80	34.23	34.85	34.07
75	0.75	0.84	0.89	22.48	21.75	21.68	21.59	20.95	20.90
78	0.83	0.93	0.99	23.98	23.07	22.92	22.90	22.25	22.14
80	0.92	1.01	1.08	43.94	41.19	39.29	28.30	28.57	28.37
83	1.43	1.55	1.64	13.10	13.15	13.18	12.61	12.62	12.62
86	3.26	3.46	3.57	5.63	5.63	5.66	5.37	5.35	5.37
90	7.99	8.28	8.43	2.05	2.10	2.14	1.87	1.90	1.94
95	14.75	15.07	15.23	0.95	1.02	1.06	0.82	0.88	0.92
100	21.02	21.35	21.51	0.66	0.72	0.76	0.56	0.62	0.66
105	26.89	27.21	27.38	0.54	0.60	0.63	0.47	0.53	0.56
108	30.37	30.68	30.86	0.50	0.55	0.58	0.44	0.49	0.52
110	32.72	33.04	33.22	0.48	0.53	0.56	0.42	0.48	0.51
150	47.18	47.26	47.34	0.28	0.32	0.34	0.30	0.35	0.37
200	51.40	51.39	51.47	0.18	0.23	0.24	0.23	0.27	0.29
250	57.84	57.76	57.60	0.13	0.17	0.18	0.18	0.23	0.24
300	64.85	64.59	64.43	0.10	0.14	0.15	0.15	0.19	0.21
500	101.70	93.72	95.93	0.05	0.09	0.10	0.08	0.13	0.14
750	67.65	67.75	67.70	0.03	0.08	0.10	0.05	0.11	0.13
1000	71.02	71.65	71.31	0.02	0.09	0.11	0.04	0.12	0.14
1200	73.15	72.79	73.08	0.04	0.12	0.14	0.05	0.13	0.16
1400	74.95	74.58	74.61	0.04	0.13	0.15	0.04	0.14	0.18
1600	76.84	77.43	77.76	0.05	0.15	0.18	0.06	0.17	0.20
1800	79.55	81.51	81.16	0.05	0.17	0.20	0.06	0.18	0.22
2000	85.47	85.72	84.28	0.07	0.19	0.23	0.07	0.21	0.25
2100	88.83	84.86	86.86	0.07	0.19	0.23	0.07	0.21	0.26
2200	96.15	87.97	87.32	0.07	0.21	0.25	0.08	0.22	0.27
2300	92.56	94.97	91.97	0.08	0.22	0.26	0.09	0.24	0.29
2400	100.15	99.26	100.10	0.09	0.23	0.28	0.09	0.24	0.30
2500	99.95	99.07	95.96	0.09	0.24	0.28	0.10	0.25	0.31
2600	100.74	91.15	105.74	0.10	0.25	0.29	0.12	0.26	0.33
2700	97.89	88.99	97.75	0.11	0.26	0.31	0.12	0.27	0.34
2800	87.16	85.77	83.23	0.11	0.26	0.32	0.12	0.28	0.35
2900	80.27	80.82	78.41	0.12	0.28	0.33	0.12	0.29	0.35
3000	75.19	74.61	73.51	0.12	0.28	0.33	0.13	0.30	0.36
3100	70.14	68.33	67.39	0.12	0.29	0.34	0.14	0.31	0.37
3200	64.31	62.65	61.62	0.13	0.30	0.35	0.13	0.31	0.37
3300	58.45	56.25	55.07	0.13	0.30	0.36	0.14	0.33	0.39

Typical Performance Data

FREQ.	GROUP DELAY		
	(nsec)		
(MHz)	@-40°C	@+25˚C	@+85˚C
62.0	26.05	25.89	25.81
62.5	25.38	25.25	25.16
63.0	24.76	24.65	24.57
63.5	24.23	24.12	24.05
64.0	23.78	23.69	23.64
64.5	23.38	23.31	23.27
65.0	23.05	23.00	22.96
65.5	22.78	22.75	22.71
66.0	22.56	22.54	22.51
66.5	22.37	22.37	22.34
67.0	22.23	22.23	22.22
67.5	22.12	22.14	22.13
68.0	22.04	22.07	22.07
68.5	21.96	22.00	22.01
69.0	21.93	21.96	21.97
69.5	21.88	21.92	21.94
70.0	21.86	21.91	21.92
70.5	21.85	21.89	21.92
71.0	21.85	21.90	21.92
71.5	21.84	21.90	21.92
72.0	21.87	21.92	21.94
72.5	21.90	21.94	21.96
73.0	21.94	21.98	22.00
73.5	21.99	22.04	22.06
74.0	22.07	22.12	22.15
74.5	22.18	22.23	22.26
75.0	22.32	22.37	22.40
75.5	22.49	22.54	22.57
76.0	22.72	22.77	22.80
76.5	22.97	23.02	23.06
77.0	23.29	23.35	23.40
77.5	23.67	23.75	23.80
78.0	24.11	24.21	24.25

Typical Performance Curves

INSERTION LOSS vs. TEMPERATURE
INPUT POWER = 0 dBm

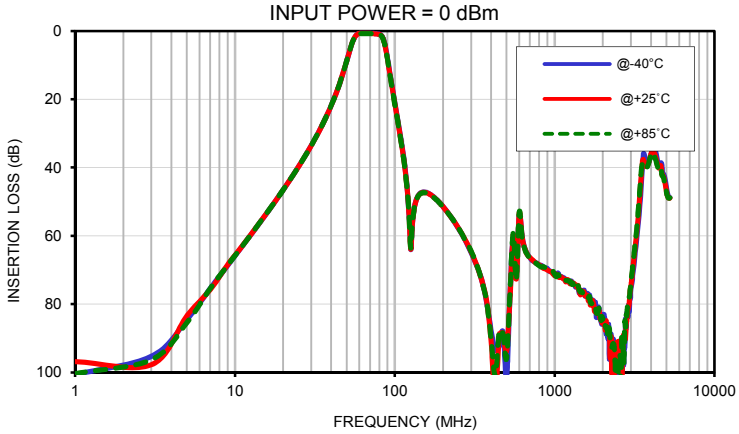

INSERTION LOSS vs. TEMPERATURE (Zoomed)
INPUT POWER = 0 dBm

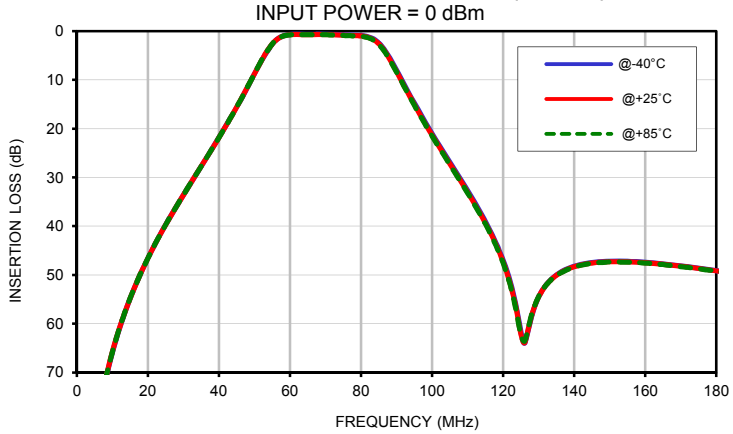

INPUT RETURN LOSS vs. TEMPERATURE
INPUT POWER = 0 dBm

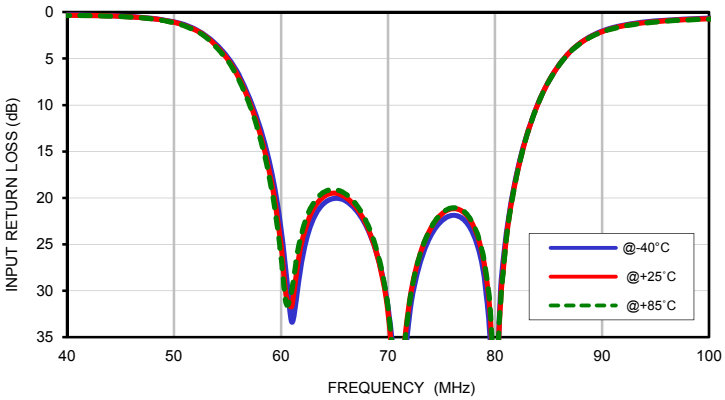

OUTPUT RETURN LOSS vs. TEMPERATURE
INPUT POWER = 0 dBm

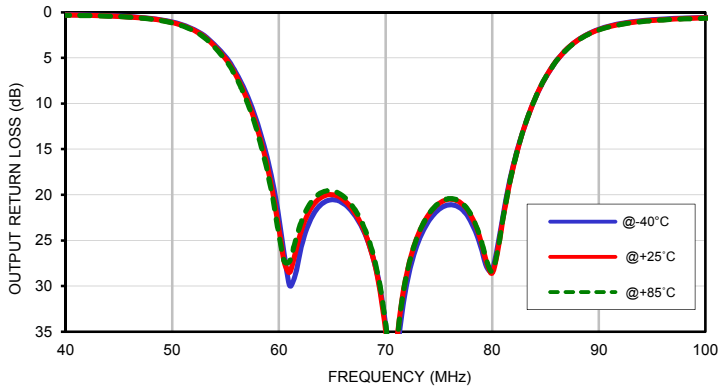

GROUP DELAY vs. TEMPERATURE
INPUT POWER = 0 dBm

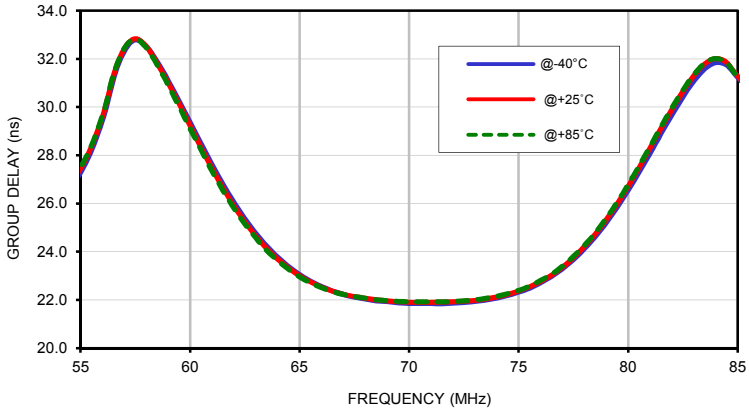

Case Style HY

Outline Dimensions

HY1239

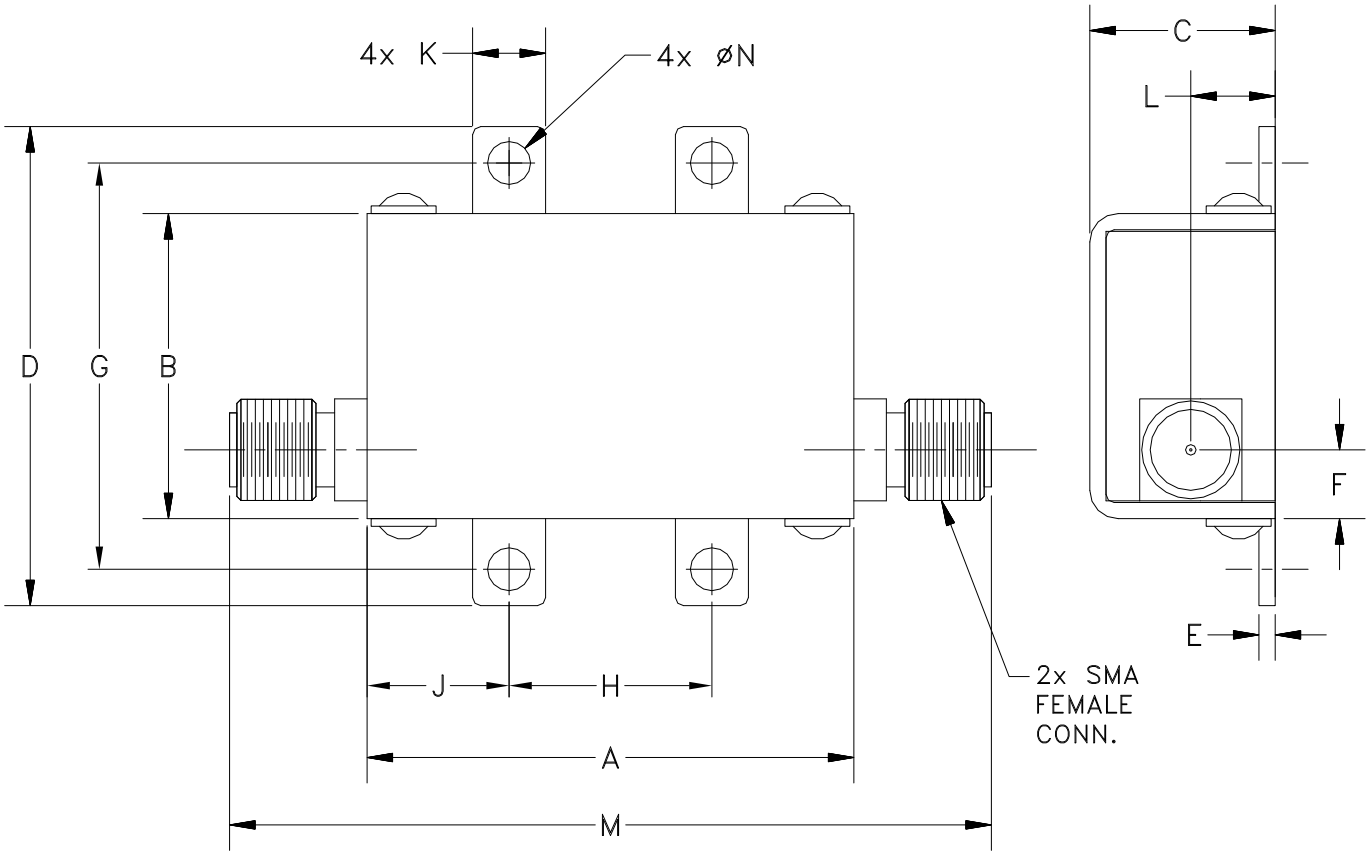

CASE #.	A	B	C	D	E	F	G	H	J	K	L	M	N	WT GRAMS
HY1239	1.20 (30.48)	.75 (19.05)	.46 (11.68)	1.18 (29.97)	.04 (1.02)	.17 (4.32)	1.00 (25.40)	.50 (12.70)	.35 (8.89)	.18 (4.57)	.21 (5.28)	1.88 (47.75)	.106 (2.69)	35.0

Dimensions are in inches (mm). Tolerances: 2Pl. ± .03; 3Pl. ± .015
Tolerance on hole size and interaxes dimensions to be ± .005.

Note:
1. Case material: Brass
2. Case finish: Nickel plate

Mini-Circuits®
INTERNET http://www.minicircuits.com
P.O. Box 350166, Brooklyn, New York 11235-0003 (718) 934-4500 Fax (718) 332-4661
Distribution Centers NORTH AMERICA 800-654-7949 • 417-335-5935 • Fax 417-335-5945 • EUROPE 44-1252-832600 • Fax 44-1252-837010
Mini-Circuits ISO 9001 & ISO 14001 Certified

This document and its contents are the property of Mini-Circuits.

Mini-Circuits

Environmental Specifications ENV46

All Mini-Circuits products are manufactured under exacting quality assurance and control standards, and are capable of meeting published specifications after being subjected to any or all of the following physical and environmental test.

Specification	Test/Inspection Condition	Reference/Spec
Operating Temperature	-55° to 100°C Ambient Environment	Individual Model Data Sheet
Storage Temperature	-55° to 100° C Ambient Environment	Individual Model Data Sheet
Humidity	90 to 95% RH, 40°C, 96 hours; Units may require bake-out after humidity to restore full performance.	MIL-STD-202, Method 103, Condintion B
Thermal Shock	-55° to 100°C, 100 cycles	MIL-STD-202, Method 107, Condition A-3, except +100°C
Vibration (High Frequency)	20g peak, 10-2000 Hz, 12 times in each of three perpendicular directions (total 36)	MIL-STD-202, Method 204, Condition D
Mechanical Shock	50g, 11ms half-sine, 3 shocks each direction 3 axes (total 18)	MIL-STD-202, Method 213, Condition A

This document and its contents are the property of Mini-Circuits.