Synthesizer Design

The following section describes the design features of a synthesizer using Mini-Circuits VCO's together with an integrated serial synthesizer and a passive loop filter. It is ideal for use in portable applications where high performance, low power consumption, and small size is required.

The design example covered here is an 800 to 900 MHZ synthesizer in 100 kHz steps with a minimum output power of 10 mW across the band. Mini-Circuits model POS-1060, a low noise voltage controlled oscillator that operates over the range of 750 to 1060 MHZ, is used. Frequency synthesis is by using National Semiconductor™ integrated circuit type LMX2314. Any similar integrated synthesizer chip may also be used. Figure 1 shows a block diagram of the synthesizer. A sample of the VCO output drives a divide by 64 prescalar which in turn drives a programmable counter. The output of the programmable counter drives the phase detector. The reference signal to the phase detector is obtained by dividing the reference signal by R. The reference signal is provided by an external 5 MHZ crystal oscillator. The output of the phase detector is a series of pulses corresponding to the frequency difference between the VCO and the reference. The current pulses are filtered, amplified, and applied to the VCO control port to reduce the phase error, and therefore to achieve a phase lock. When there is a phase error between the reference and the VCO, the dc error signal from the phase detector is amplified, filtered, and applied to the control port of the VCO until the phase error reduces to zero.

The IC2 shown is a high input impedance operational amplifier that interfaces with any VCO whether wide band or narrow band. It is, however, optional and may be omitted if a narrow band VCO is used. Here, the tuning range needed for frequency coverage is less than the supply voltage used for the synthesizer circuit. For example, when the LMX2324 is operated with a +5V supply, the available tuning range for the VCO is less than 5V without the operational amplifier. The tuning range may be increased with the use of an operational amplifier, as shown. Mini-Circuits offers a wide variety of voltage controlled oscillators, including 5V units, that can be used for synthesizer applications. For special requirements, contact Mini-Circuits applications department for a fast, courteous, and knowledgeable response.
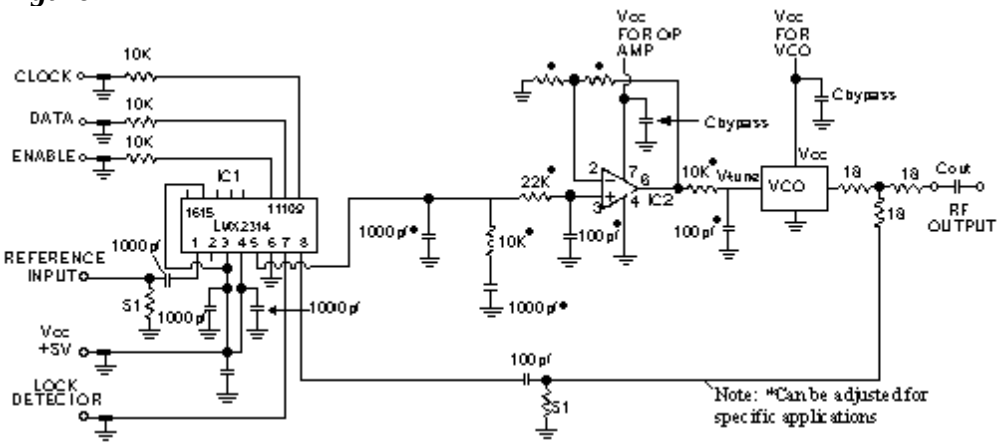
Figure 1