Case Style BAV

Outline Dimensions

BAV3743

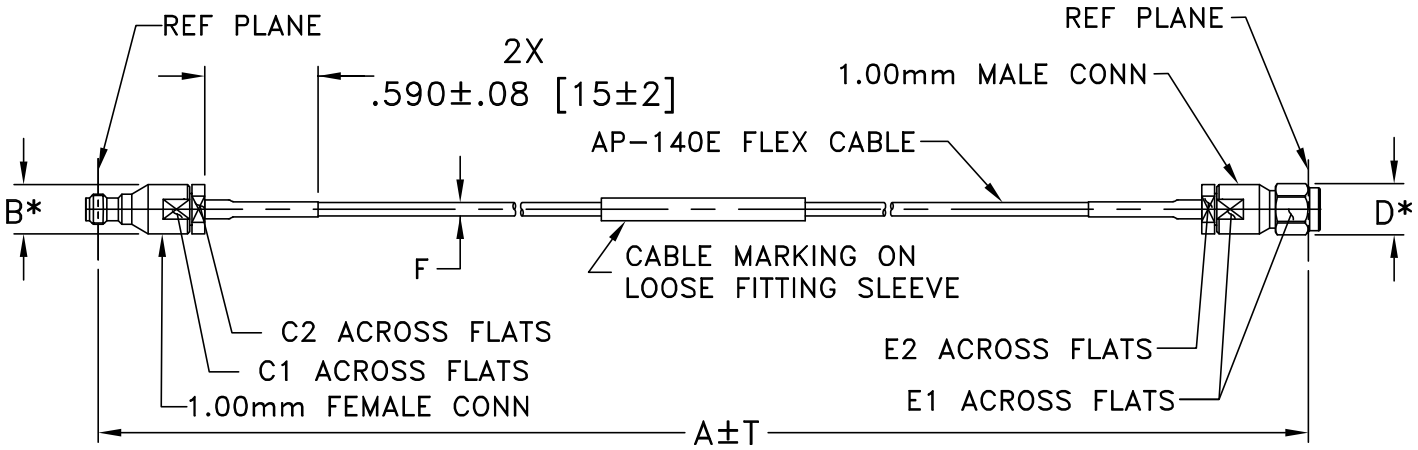

* OVERALL CONNECTOR OR CABLE & BOOT DIM
[CONNECTOR SHAPE MAY VARY]

CASE#	A		B	C1	C2	D	E1	E2	F	T		WEIGHT
	INCH	MM							AP110-A-W1F1M+	INCH	MM	GRAMS
BAV3743-6	6.00	152.40								.10	2.54	9.84
BAV3743-12	12.00	304.80								.15	3.81	10.68
			.26 [6.6]	.236 [6.00]	.217 [5.50]	.27 [6.9]	.236 [6.00]	.217 [5.50]	.056 [1.42]			

Unless Otherwise Specified dimensions are in inches [mm],
Tolerances: 2 Pl. ± .03; 3 Pl. ± .015 inches

Notes:
1. AP-140E Flexible Cable.
2. "A" Represents Length of Cable.

This document and its contents are the property of Mini-Circuits