Case Style JC

Outline Dimensions

JC0603C-7

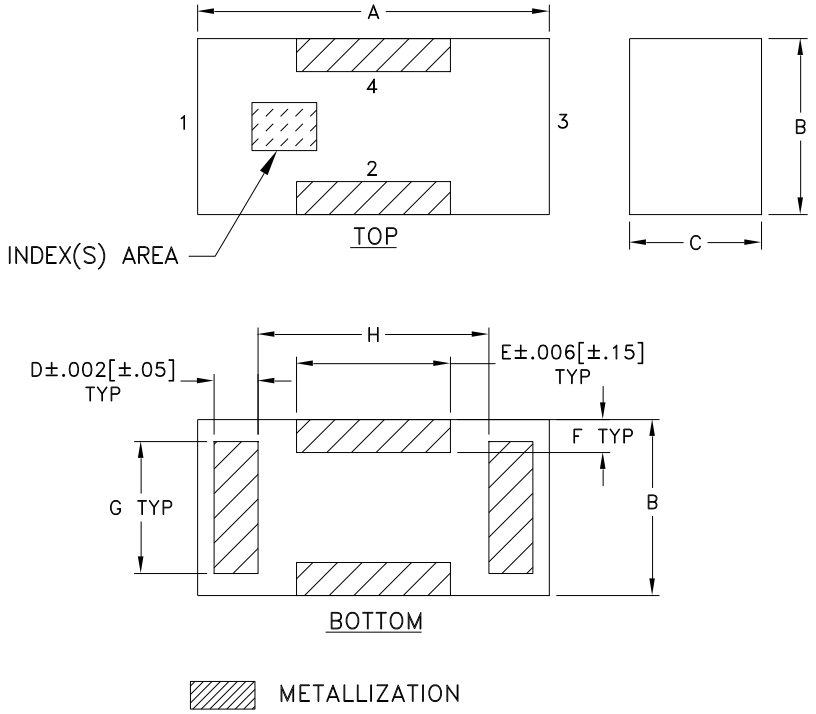

PCB Land Pattern

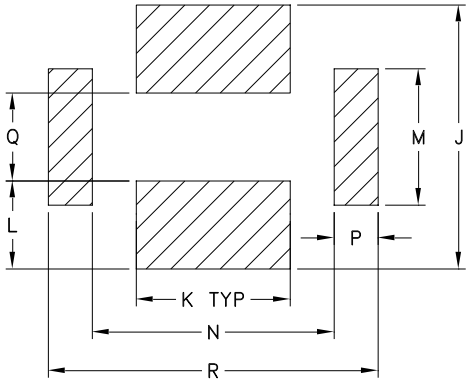

Suggested Layout,
Tolerance to be within ±.002

CASE #	A	B	C	D	E	F	G	H	J	K	L
JC0603C-7	.063 (1.60)	.032 (.80)	.024 (.60)	.008 (.20)	.028 (.70)	.006 (.15)	.024 (.60)	.041 (1.05)	.047 (1.20)	.028 (.70)	.016 (.40)

CASE#	M*	N	P	Q	R	WT.GRAMS
JC0603C-7	.024 (.62)	.043 (1.10)	.008 (.20)	.016 (.40)	.059 (1.50)	.005

Dimensions are in inches (mm). Tolerances: 3 Pl. ± .004

Notes:

1. Open style, ceramic base.
2. Termination finish:
   For RoHS Case Styles: Tin plate over Nickel plate. All models, (+) suffix.
3. - Line width should be designed to match 50 OHMS characteristic impedance, depending on PCB material & thickness.

This document and its contents are the property of Mini-Circuits.