Case Style DJ

Outline Dimensions DJ3521

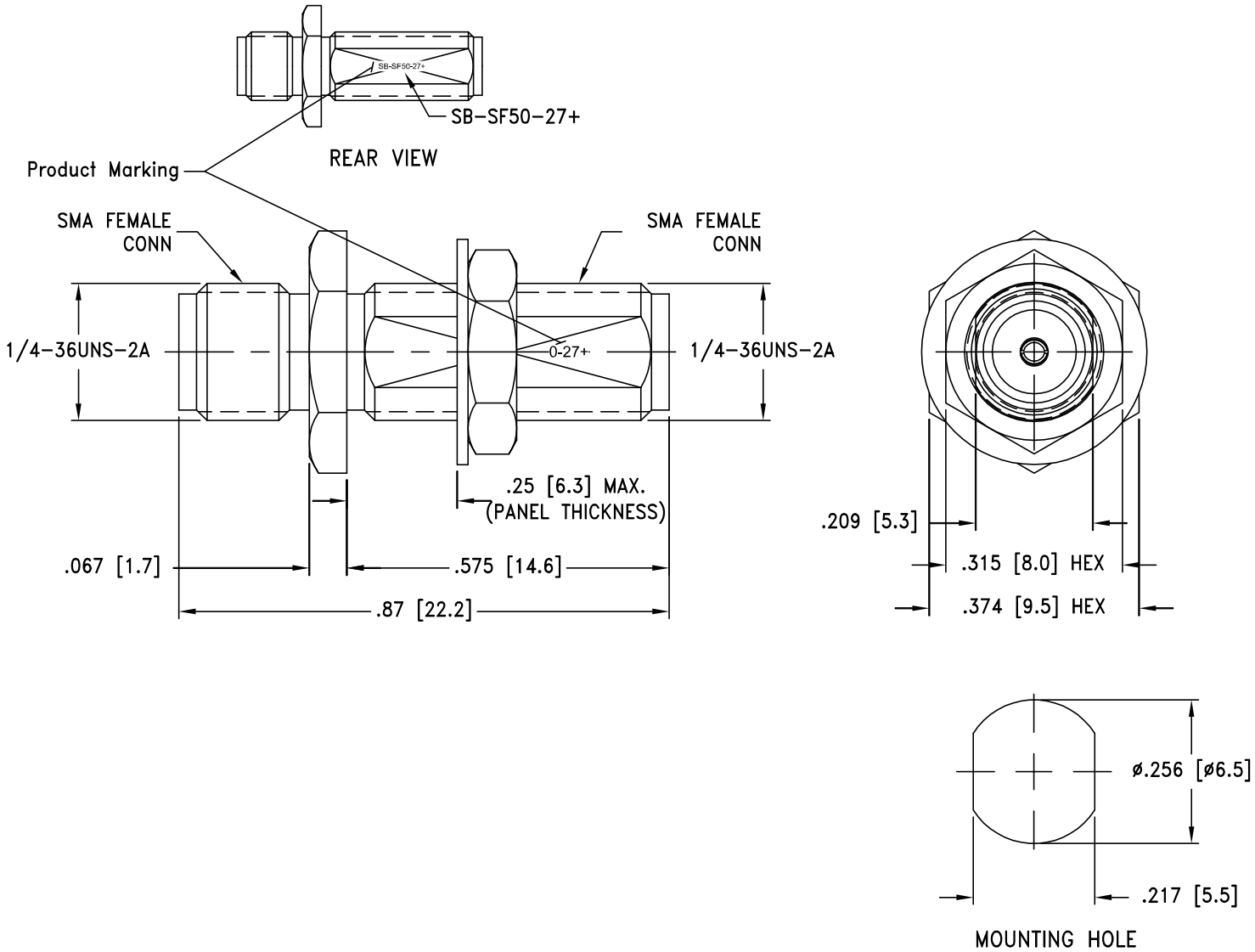

Weight: 3.78 grams

Dimensions are in inches [mm]. Tolerances: 2 Pl.±.030; 3 Pl. ±.015 Inches

Notes:

Case material: Stainless steel.
Case Finish: Passivated.

Mini-Circuits®
ISO 9001 ISO 14001 CERTIFIED
ALL NEW minicircuits.com
P.O. Box 350166, Brooklyn, New York 11235-0003 (718) 934-4500 Fax (718) 332-4661 For detailed performance specs & shopping online see Mini-Circuits web site
The Design Engineers Search Engine Provides ACTUAL Data Instantly From MINI-CIRCUITS At: www.minicircuits.com
RF/IF MICROWAVE COMPONENTS