Evaluation Board and Circuit

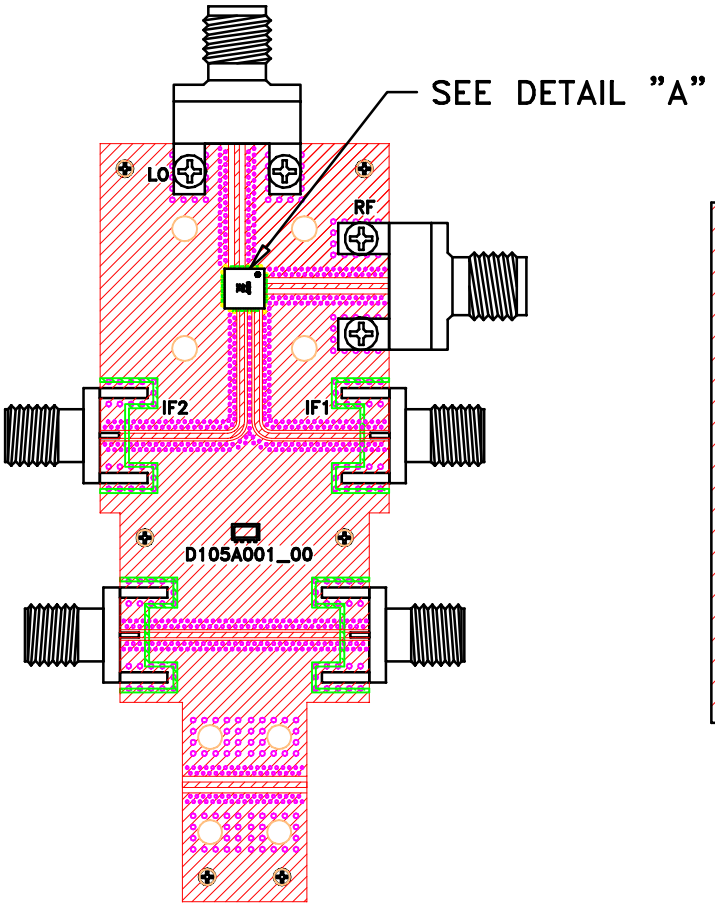

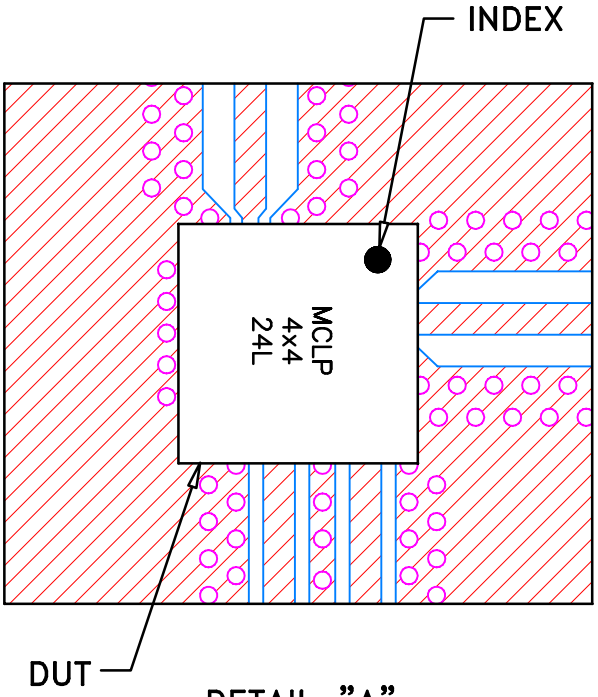

DETAIL "A"
(SCALE 6:1)

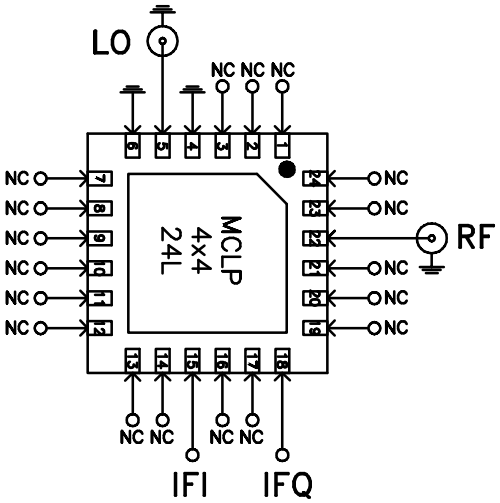

Function	Pad
RF	22
LO	5
IFQ	18
IFI	15
GND	4,6
NC, GND Externally	1–3,7–14,16–17,19–21,23–24

THRU LINE

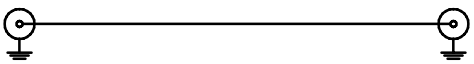

SCHEMATIC DIAGRAM
(SCALE 5:1)

Notes:

1. 2.92mm Female Connectors.
2. PCB Material: Roger RO4350B or equivalent, Dielectric constant=3.5, Thickness=0.010 inch

Mini-Circuits®

THIS DOCUMENT AND ITS CONTENTS ARE THE PROPERTY OF MINI-CIRCUITS.